Manualslib.com - Simplified Manuals

MUSIC GROUP IP MIDAS M32R SERVICE MANUAL

Table of Contents

Contents

Specifications

PCB Schematic

Parts List

Service Assemblies

Circuit Protector

Plug Socket

Power Supply

Exploded Drawing

M32R

Digital Console for Live and Studio with 40 Input Channels, 16 MIDAS PRO Microphone Preamplifiers and 25 Mix Buses

Specifications 2
PCB Schematic 3
Parts List 38
Exploded Drawing 64

Service Manual

Created: 25 March 2016

midasconsoles.com

© 2016 MUSIC Group IP Ltd. All third party trademarks mentioned belong to their respective owners and are not affiliated with MUSIC Group IP Ltd. All information (including drawings and diagrams) contained in this document is the property of MUSIC Group IP Ltd., its subsidiaries or content providers, and is protected by intellectual property (copyright, trademark, patents, etc) laws, international treaty provisions and other laws. Any unauthorized disclosure, use, application, reproduction, modification, lease, sale, transmission or any other dealings in the information may violate applicable laws and result in civil and/or (where applicable) criminal liabilities and penalties.

M32R
Specifications

- Live performance and studio recording digital console with up to 40 simultaneous input channels
- 16 award-winning MIDAS PRO microphone preamplifiers
- 25 time-aligned and phase-coherent mix buses
- AES50 networking allows up to 96 inputs and 96 outputs
- Open architecture allows for future 96 kHz operation
- 192 kHz ADC and DAC converters for outstanding audio performance
- Industry-leading design by Bentley* Motors Designer
- High-performance aluminium and high-impact steel structure
- Rack mount brackets included for ultimate flexibility
- 40 bit floating point digital signal processing
- 8 DCA and 6 mute groups
- 8 digital signal processing effects engines
- 17 MIDAS PRO motorised 100 mm faders
- Daylight viewable 5" full colour TFT display screen
- 32 x 32 channel USB 2.0 audio interface
- DAW remote control emulations of Mackie Control* and HUI* protocols
- Optional wireless remote control with MIDAS Apps for iPhone* and iPad*
- Auto-ranging universal switch-mode power supply
- 3-Year Warranty Program*
- Designed and engineered in England

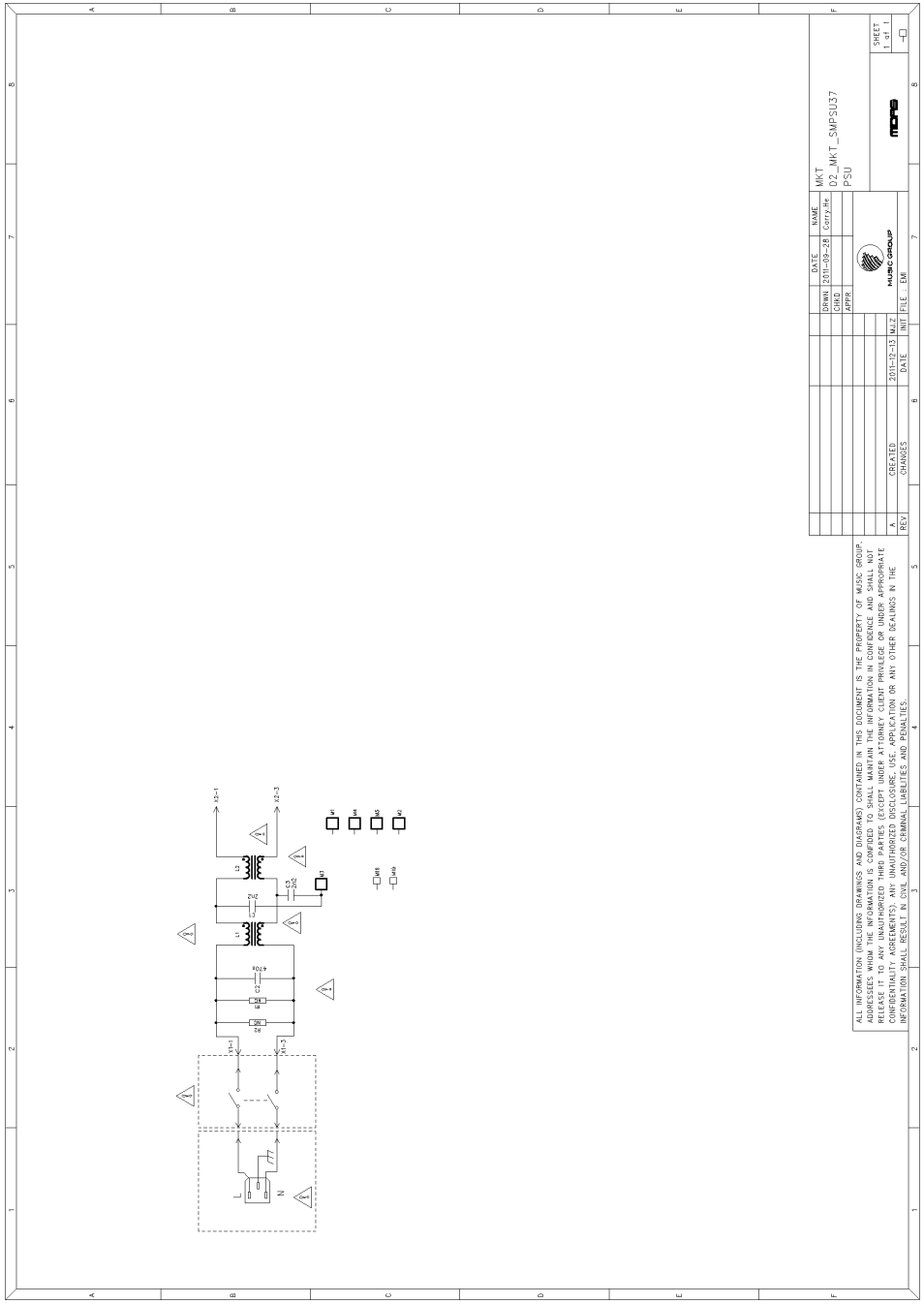
MKT
D2_MKT_SMPSU37
PSU
SHEET
1 of 1
DATE
NAME
DRWN
CHKD
APPR
2011-09-28
Carry.He
MUSIC GROUP
A
REV
CREATED
CHANGES
2011-12-13
DATE
M.Z
INIT
FILE : EMI
ALL INFORMATION (INCLUDING DRAWINGS AND DIAGRAMS) CONTAINED IN THIS DOCUMENT IS THE PROPERTY OF MUSIC GROUP. ADDRESSEES WHOM THE INFORMATION IS CONFIDED TO SHALL MAINTAIN THE INFORMATION IN CONFIDENCE AND SHALL NOT RELEASE IT TO ANY UNAUTHORIZED THIRD PARTIES (EXCEPT UNDER A TOPNEY CLIENT PRIVILEGE OR UNDER APPROPRIATE CONFIDENTIALITY AGREEMENTS). ANY UNAUTHORIZED DISCLOSURE, USE, APPLICATION OR ANY OTHER DEALINGS IN THE INFORMATION SHALL RESULT IN CIVIL AND/OR CRIMINAL LIABILITIES AND PENALTIES.

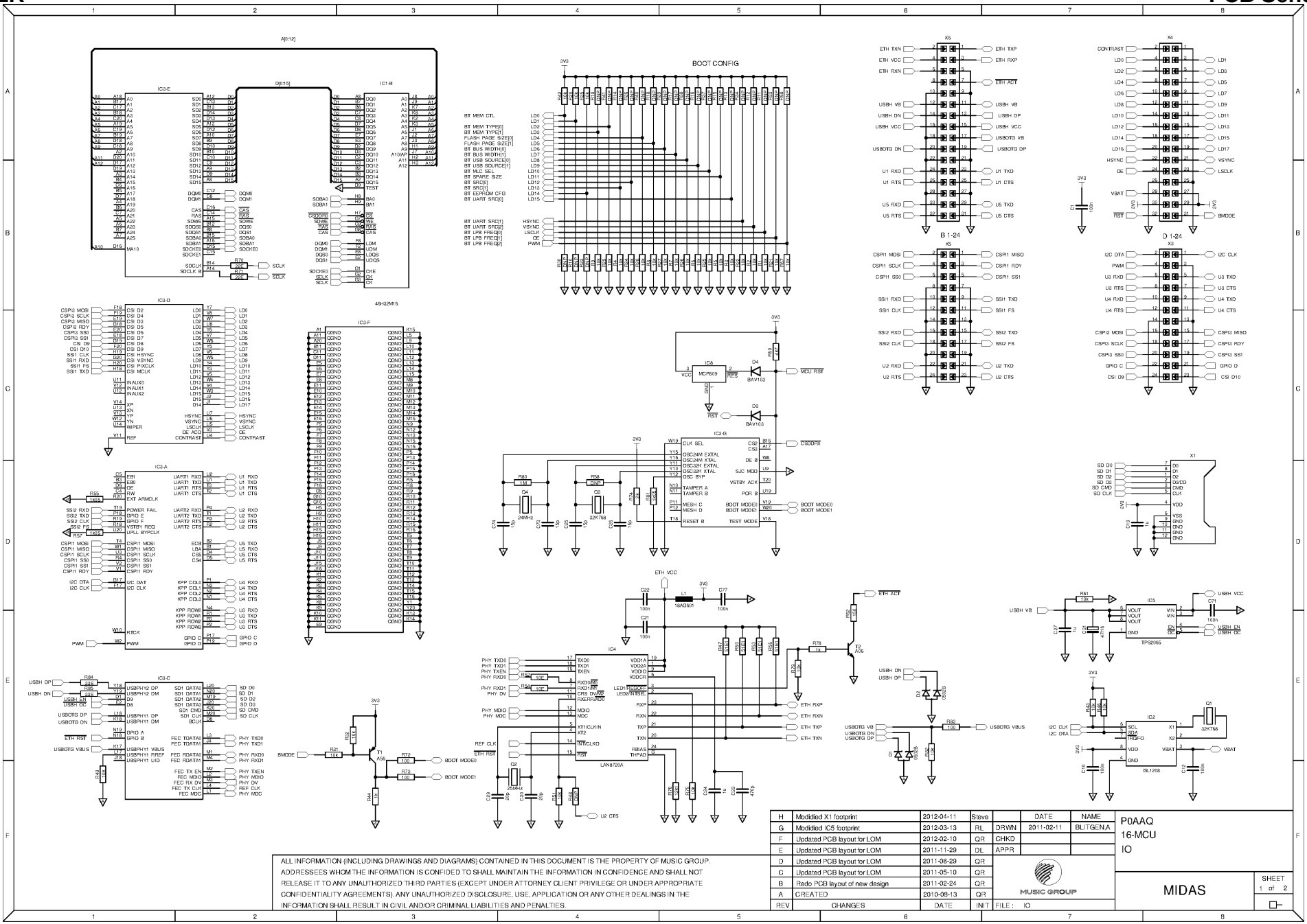

REV	CHANGES	DATE	INIT
H	Modidied X1 footprint	2012-04-11	Steve
G	Modidied IC5 footprint	2012-03-13	RL
F	Updated PCB layout for LOM	2012-02-10	QR
E	Updated PCB layout for LOM	2011-11-29	DL
D	Updated PCB layout for LOM	2011-06-29	QR
C	Updated PCB layout for LOM	2011-05-10	QR
B	Redo PCB layout of new design	2011-02-24	QR
A	CREATED	2010-08-13	QR

DRWN 2011-02-11 BLITGENA
CHKD
APPR

P0AAQ
16-MCU
IO

FILE : IO

MIDAS

SHEET 1 of 2

ALL INFORMATION (INCLUDING DRAWINGS AND DIAGRAMS) CONTAINED IN THIS DOCUMENT IS THE PROPERTY OF MUSIC GROUP. ADDRESSEES WHOM THE INFORMATION IS CONFIDED TO SHALL MAINTAIN THE INFORMATION IN CONFIDENCE AND SHALL NOT RELEASE IT TO ANY UNAUTHORIZED THIRD PARTIES (EXCEPT UNDER ATTORNEY CLIENT PRIVILEGE OR UNDER APPROPRIATE CONFIDENTIALITY AGREEMENTS). ANY UNAUTHORIZED DISCLOSURE, USE, APPLICATION OR ANY OTHER DEALINGS IN THE INFORMATION SHALL RESULT IN CIVIL AND/OR CRIMINAL LIABILITIES AND PENALTIES.

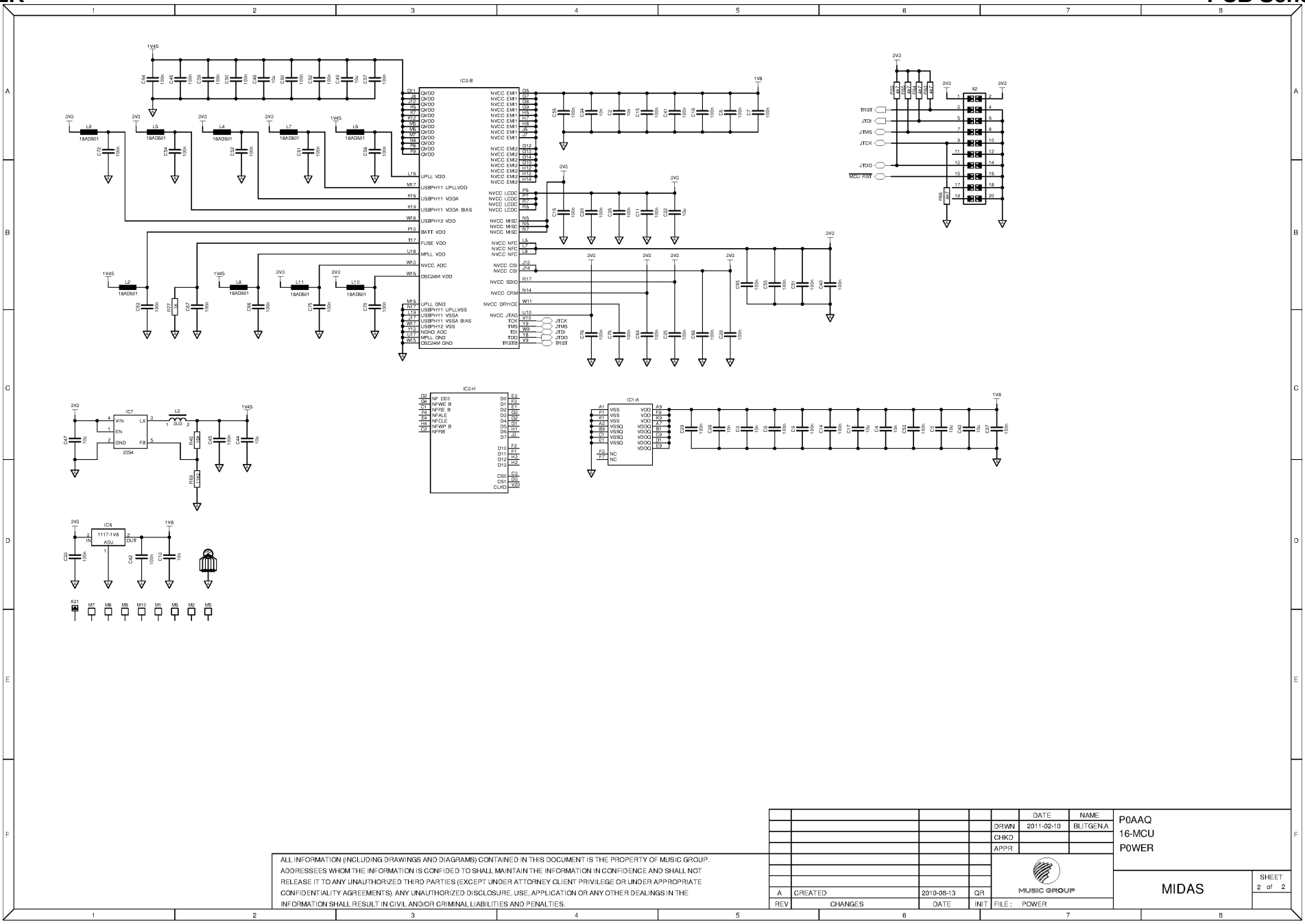

					DATE	NAME
				DRWN	2011-02-10	BLITGEN,A
				CHKD		
				APPR		

P0AAQ
16-MCU
P0WER

ALL INFORMATION (INCLUDING DRAWINGS AND DIAGRAMS) CONTAINED IN THIS DOCUMENT IS THE PROPERTY OF MUSIC GROUP. ADDRESSEES WHOM THE INFORMATION IS CONFIDED TO SHALL MAINTAIN THE INFORMATION IN CONFIDENCE AND SHALL NOT RELEASE IT TO ANY UNAUTHORIZED THIRD PARTIES (EXCEPT UNDER ATTORNEY CLIENT PRIVILEGE OR UNDER APPROPRIATE CONFIDENTIALITY AGREEMENTS). ANY UNAUTHORIZED DISCLOSURE, USE, APPLICATION OR ANY OTHER DEALINGS IN THE INFORMATION SHALL RESULT IN CIVIL AND/OR CRIMINAL LIABILITIES AND PENALTIES.

REV	CHANGES	DATE	INIT
A	CREATED	2010-08-13	QR

MUSIC GROUP

FILE : POWER

MIDAS

SHEET 2 of 2

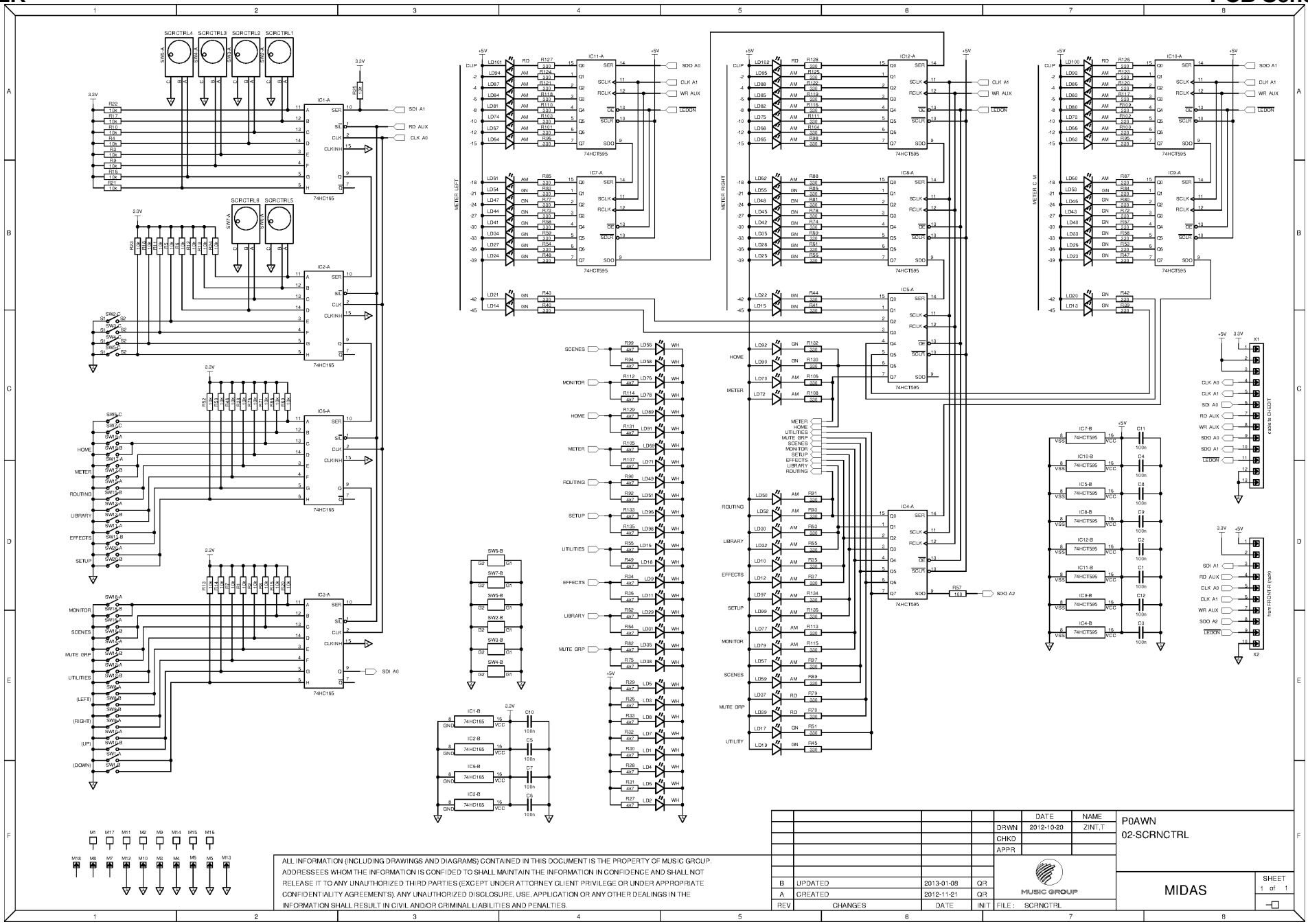
SCRCTRL4
SCRCTRL3
SCRCTRL2
SCRCTRL1
SCRCTRL6
SCRCTRL5
IC1-A
IC2-A
IC6-A
IC3-A
IC11-A
IC7-A
IC12-A
IC8-A
IC10-A
IC9-A
IC5-A
IC4-A
74HC165
74HCT595
SDI A1
RD AUX
CLK A0
SDO A0
CLK A1
WR AUX
LEDON
SDO A1
SDO A2
SDI A0
METER LEFT
METER RIGHT
METER C M
SCENES
MONITOR
HOME
METER
ROUTING
SETUP
UTILITIES
EFFECTS
LIBRARY
MUTE GRP
(LEFT)
(RIGHT)
(UP)
(DOWN)
UTILITY
IC1-B
IC2-B
IC5-B
IC3-B
IC7-B
IC10-B
IC5-B
IC8-B
IC12-B
IC11-B
IC9-B
IC4-B
cable to CHEDIT
from FRONT-R (rack)
ALL INFORMATION (INCLUDING DRAWINGS AND DIAGRAMS) CONTAINED IN THIS DOCUMENT IS THE PROPERTY OF MUSIC GROUP.
ADDRESSEES WHOM THE INFORMATION IS CONFIDED TO SHALL MAINTAIN THE INFORMATION IN CONFIDENCE AND SHALL NOT
RELEASE IT TO ANY UNAUTHORIZED THIRD PARTIES (EXCEPT UNDER ATTORNEY CLIENT PRIVILEGE OR UNDER APPROPRIATE
CONFIDENTIALITY AGREEMENTS). ANY UNAUTHORIZED DISCLOSURE, USE, APPLICATION OR ANY OTHER DEALINGS IN THE
INFORMATION SHALL RESULT IN CIVIL AND/OR CRIMINAL LIABILITIES AND PENALTIES.
REV CHANGES DATE INIT
B UPDATED 2013-01-08 QR
A CREATED 2012-11-21 QR
DRWN 2012-10-20 ZINT,T
CHKD
APPR
P0AWN
02-SCRNCTRL
MUSIC GROUP
MIDAS
SHEET 1 of 1
FILE : SCRNCTRL

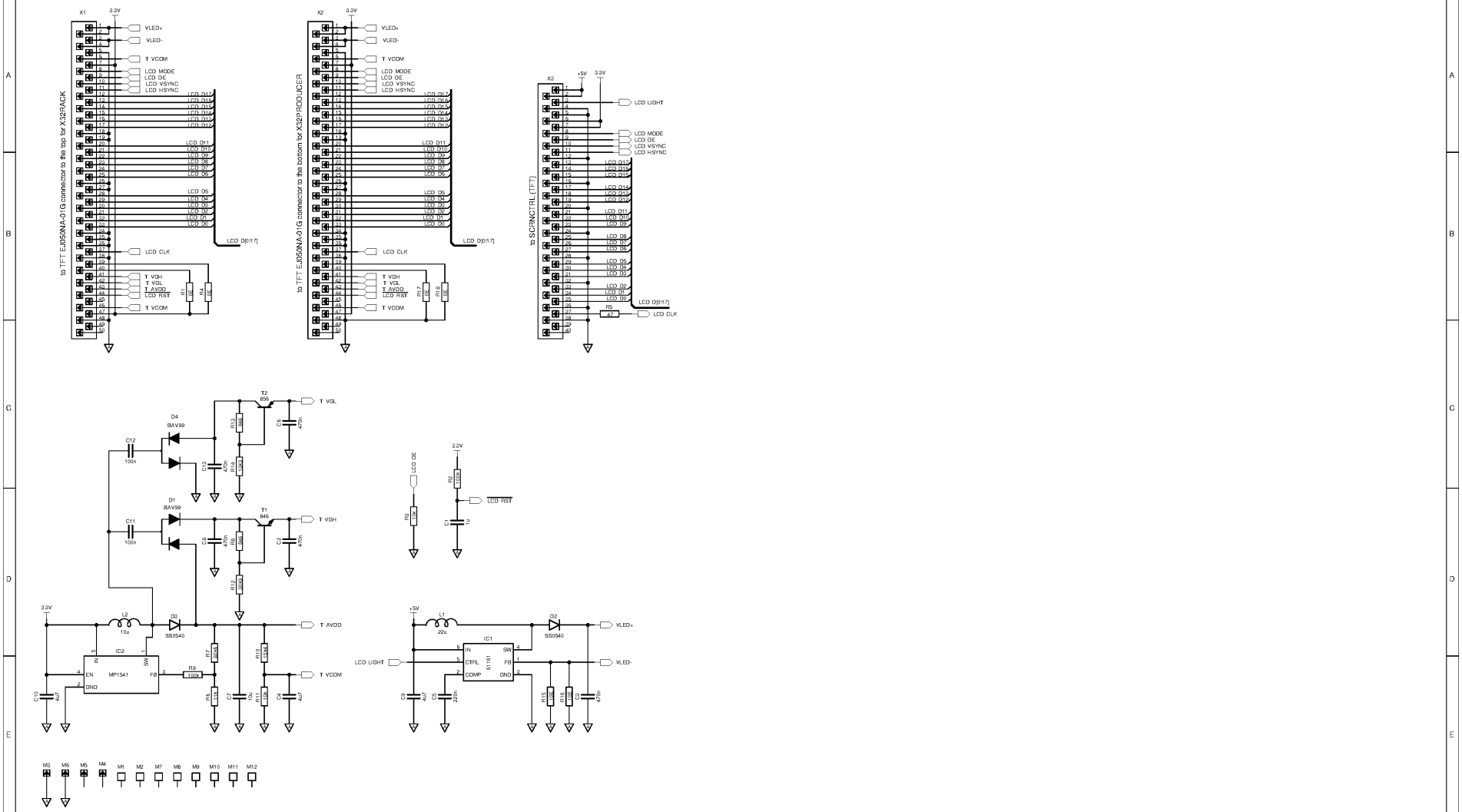

					DATE	NAME
				DRWN	2012-10-20	ZINT,T
				CHKD		
				APPR		

P0AWN
SCRNCTRL
05-TFT

REV	CHANGES	DATE	INIT
C	Add 47 OHM FOR LCD_CLK	2013-07-09	QR
B	UPDATED	2013-01-08	QR
A	CREATED	2012-11-13	QR

FILE : TFT

MUSIC GROUP

MIDAS

SHEET 1 of 1

ALL INFORMATION (INCLUDING DRAWINGS AND DIAGRAMS) CONTAINED IN THIS DOCUMENT IS THE PROPERTY OF MUSIC GROUP. ADDRESSEES WHOM THE INFORMATION IS CONFIDED TO SHALL MAINTAIN THE INFORMATION IN CONFIDENCE AND SHALL NOT RELEASE IT TO ANY UNAUTHORIZED THIRD PARTIES (EXCEPT UNDER ATTORNEY CLIENT PRIVILEGE OR UNDER APPROPRIATE CONFIDENTIALITY AGREEMENTS). ANY UNAUTHORIZED DISCLOSURE, USE, APPLICATION OR ANY OTHER DEALINGS IN THE INFORMATION SHALL RESULT IN CIVIL AND/OR CRIMINAL LIABILITIES AND PENALTIES.

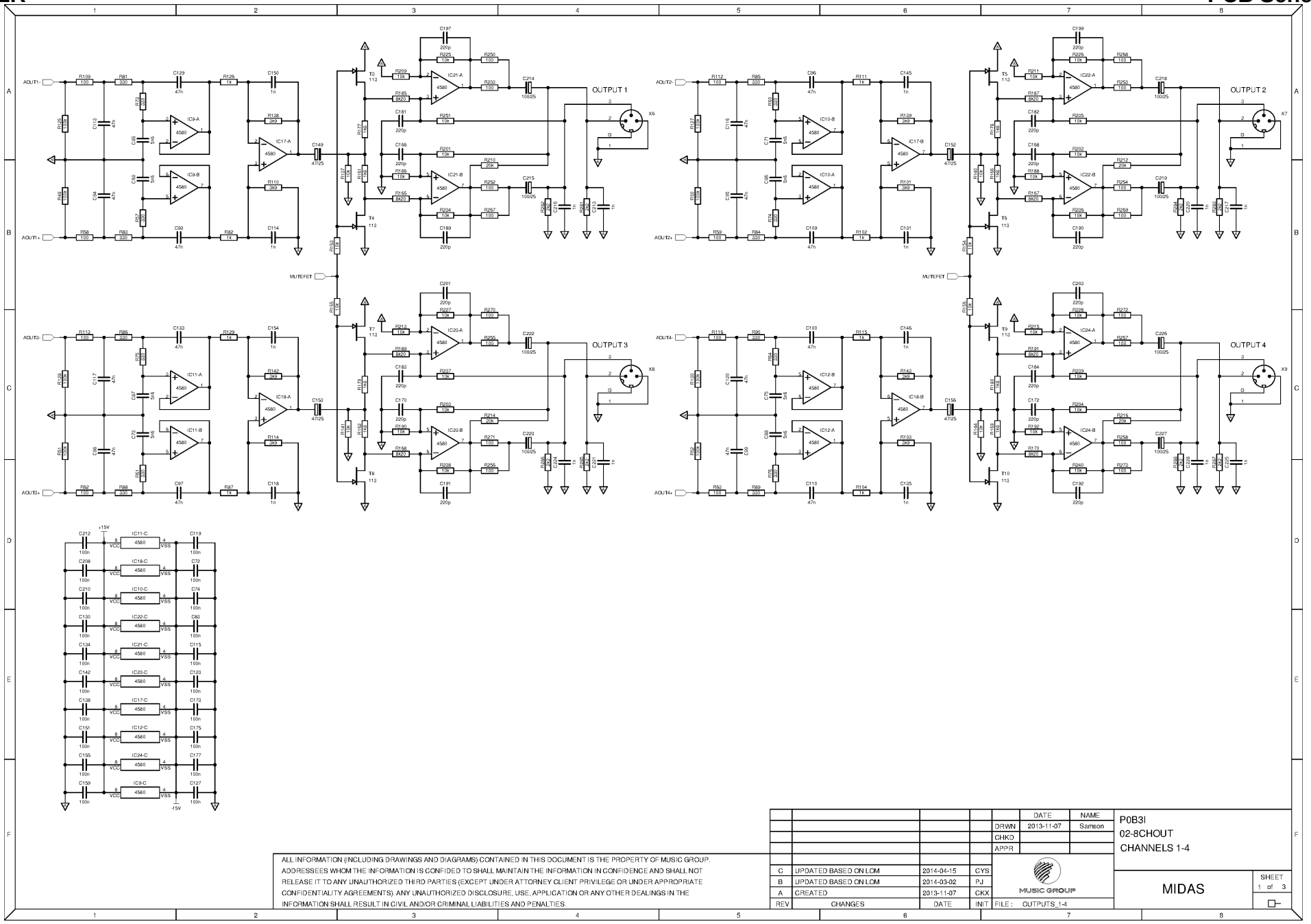

					DATE	NAME
				DRWN	2013-11-07	Samson
				CHKD		
				APPR		

P0B3I
02-8CHOUT
CHANNELS 1-4

ALL INFORMATION (INCLUDING DRAWINGS AND DIAGRAMS) CONTAINED IN THIS DOCUMENT IS THE PROPERTY OF MUSIC GROUP. ADDRESSEES WHOM THE INFORMATION IS CONFIDED TO SHALL MAINTAIN THE INFORMATION IN CONFIDENCE AND SHALL NOT RELEASE IT TO ANY UNAUTHORIZED THIRD PARTIES (EXCEPT UNDER ATTORNEY CLIENT PRIVILEGE OR UNDER APPROPRIATE CONFIDENTIALITY AGREEMENTS). ANY UNAUTHORIZED DISCLOSURE, USE, APPLICATION OR ANY OTHER DEALINGS IN THE INFORMATION SHALL RESULT IN CIVIL AND/OR CRIMINAL LIABILITIES AND PENALTIES.

REV	CHANGES	DATE	INIT
C	UPDATED BASED ON LOM	2014-04-15	CYS
B	UPDATED BASED ON LOM	2014-03-02	PJ
A	CREATED	2013-11-07	CKX

MUSIC GROUP

FILE : OUTPUTS_1-4

MIDAS

SHEET 1 of 3

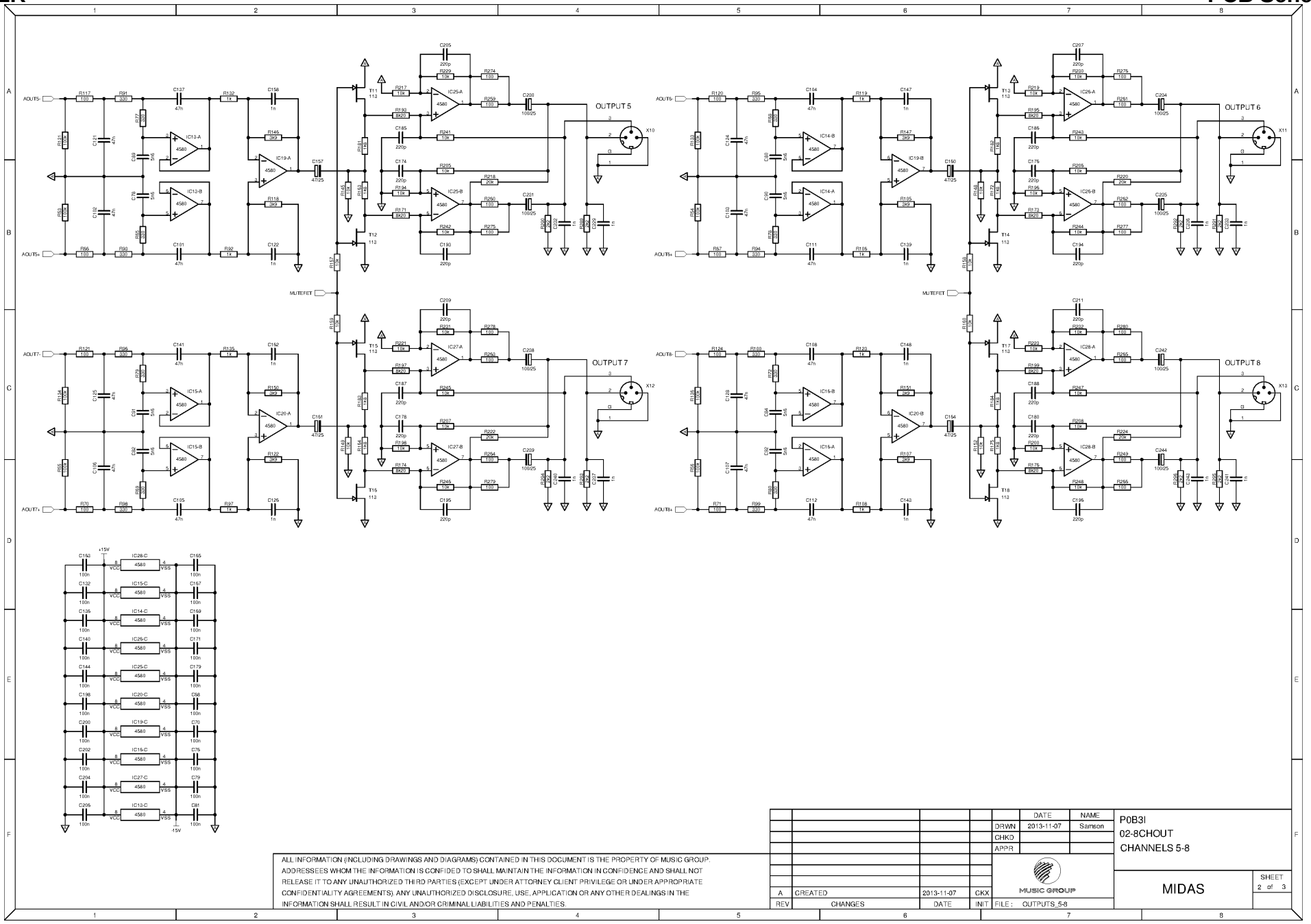

ALL INFORMATION (INCLUDING DRAWINGS AND DIAGRAMS) CONTAINED IN THIS DOCUMENT IS THE PROPERTY OF MUSIC GROUP. ADDRESSEES WHOM THE INFORMATION IS CONFIDED TO SHALL MAINTAIN THE INFORMATION IN CONFIDENCE AND SHALL NOT RELEASE IT TO ANY UNAUTHORIZED THIRD PARTIES (EXCEPT UNDER ATTORNEY CLIENT PRIVILEGE OR UNDER APPROPRIATE CONFIDENTIALITY AGREEMENTS). ANY UNAUTHORIZED DISCLOSURE, USE, APPLICATION OR ANY OTHER DEALINGS IN THE INFORMATION SHALL RESULT IN CIVIL AND/OR CRIMINAL LIABILITIES AND PENALTIES.

REV	CHANGES	DATE	INIT
A	CREATED	2013-11-07	CKX

	DATE	NAME
DRWN	2013-11-07	Samson
CHKD		
APPR		

P0B3I
02-8CHOUT
CHANNELS 5-8

MUSIC GROUP

FILE : OUTPUTS_5-8

MIDAS

SHEET 2 of 3

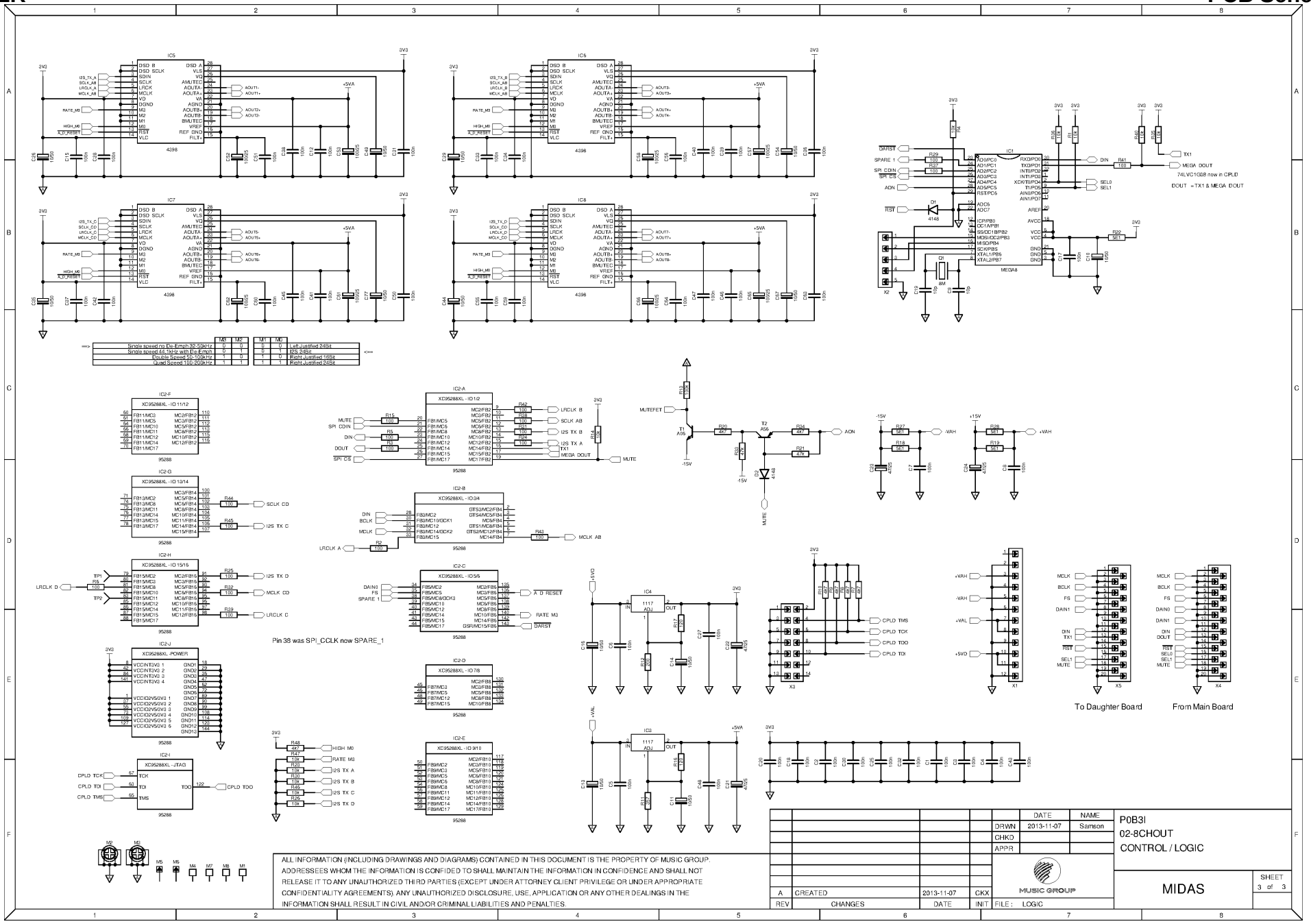
IC5
IC6
IC7
IC8
4398
Single speed no De-Emph 32-50kHz
Single speed 44.1kHz with De-Emph
Double Speed 50-100kHz
Quad Speed 100-200kHz
Left Justified 24Bit
I2S 24Bit
Right Justified 18Bit
Right Justified 24Bit
IC2-F
IC2-A
IC2-G
IC2-B
IC2-H
IC2-C
IC2-J
IC2-D
IC2-I
IC2-E
XC95288XL - IO 11/12
XC95288XL - IO 1/2
XC95288XL - IO 13/14
XC95288XL - IO 3/4
XC95288XL - IO 15/16
XC95288XL - IO 5/6
XC95288XL -POWER
XC95288XL - IO 7/8
XC95288XL - JTAG
XC95288XL - IO 9/10
95288
Pin 38 was SPI_CCLK now SPARE_1
IC1
MEGA8
74LVC1G08 now in CPLD
DOUT = TX1 & MEGA DOUT
IC4
IC3
1117 ADJ
CPLD TMS
CPLD TCK
CPLD TDO
CPLD TDI
To Daughter Board
From Main Board
P0B3I
02-8CHOUT
CONTROL / LOGIC
MIDAS
SHEET 3 of 3
DRWN 2013-11-07 Samson
CHKD
APPR
A CREATED 2013-11-07 CKX
REV CHANGES DATE INIT
FILE : LOGIC
MUSIC GROUP
ALL INFORMATION (INCLUDING DRAWINGS AND DIAGRAMS) CONTAINED IN THIS DOCUMENT IS THE PROPERTY OF MUSIC GROUP. ADDRESSEES WHOM THE INFORMATION IS CONFIDED TO SHALL MAINTAIN THE INFORMATION IN CONFIDENCE AND SHALL NOT RELEASE IT TO ANY UNAUTHORIZED THIRD PARTIES (EXCEPT UNDER ATTORNEY CLIENT PRIVILEGE OR UNDER APPROPRIATE CONFIDENTIALITY AGREEMENTS). ANY UNAUTHORIZED DISCLOSURE, USE, APPLICATION OR ANY OTHER DEALINGS IN THE INFORMATION SHALL RESULT IN CIVIL AND/OR CRIMINAL LIABILITIES AND PENALTIES.

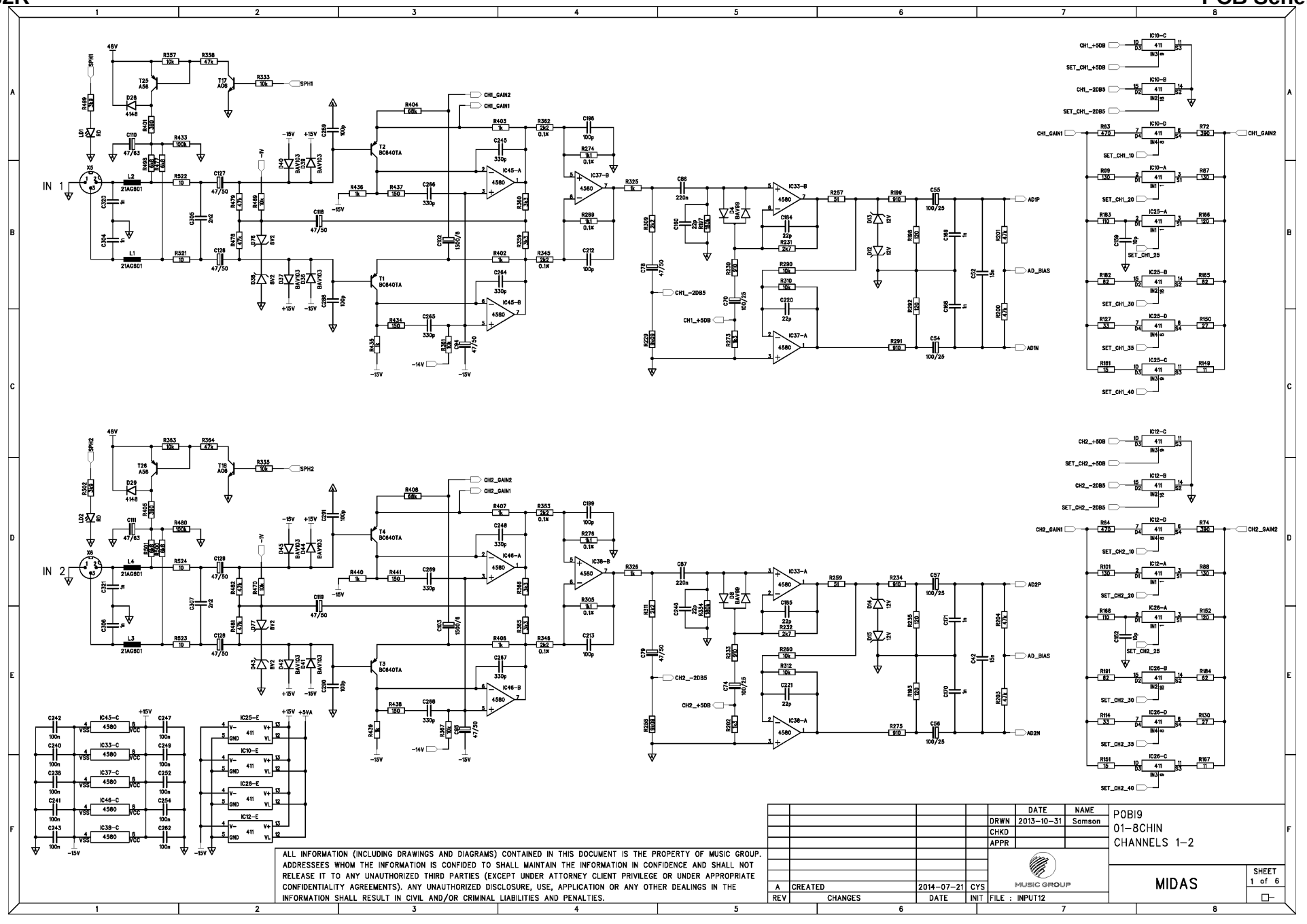

ALL INFORMATION (INCLUDING DRAWINGS AND DIAGRAMS) CONTAINED IN THIS DOCUMENT IS THE PROPERTY OF MUSIC GROUP. ADDRESSEES WHOM THE INFORMATION IS CONFIDED TO SHALL MAINTAIN THE INFORMATION IN CONFIDENCE AND SHALL NOT RELEASE IT TO ANY UNAUTHORIZED THIRD PARTIES (EXCEPT UNDER ATTORNEY CLIENT PRIVILEGE OR UNDER APPROPRIATE CONFIDENTIALITY AGREEMENTS). ANY UNAUTHORIZED DISCLOSURE, USE, APPLICATION OR ANY OTHER DEALINGS IN THE INFORMATION SHALL RESULT IN CIVIL AND/OR CRIMINAL LIABILITIES AND PENALTIES.

REV	CHANGES	DATE	INIT
A	CREATED	2014-07-21	CYS

	DATE	NAME
DRWN	2013-10-31	Samson
CHKD		
APPR		

POBI9
01-8CHIN
CHANNELS 1-2

MUSIC GROUP

FILE : INPUT12

MIDAS

SHEET 1 of 6

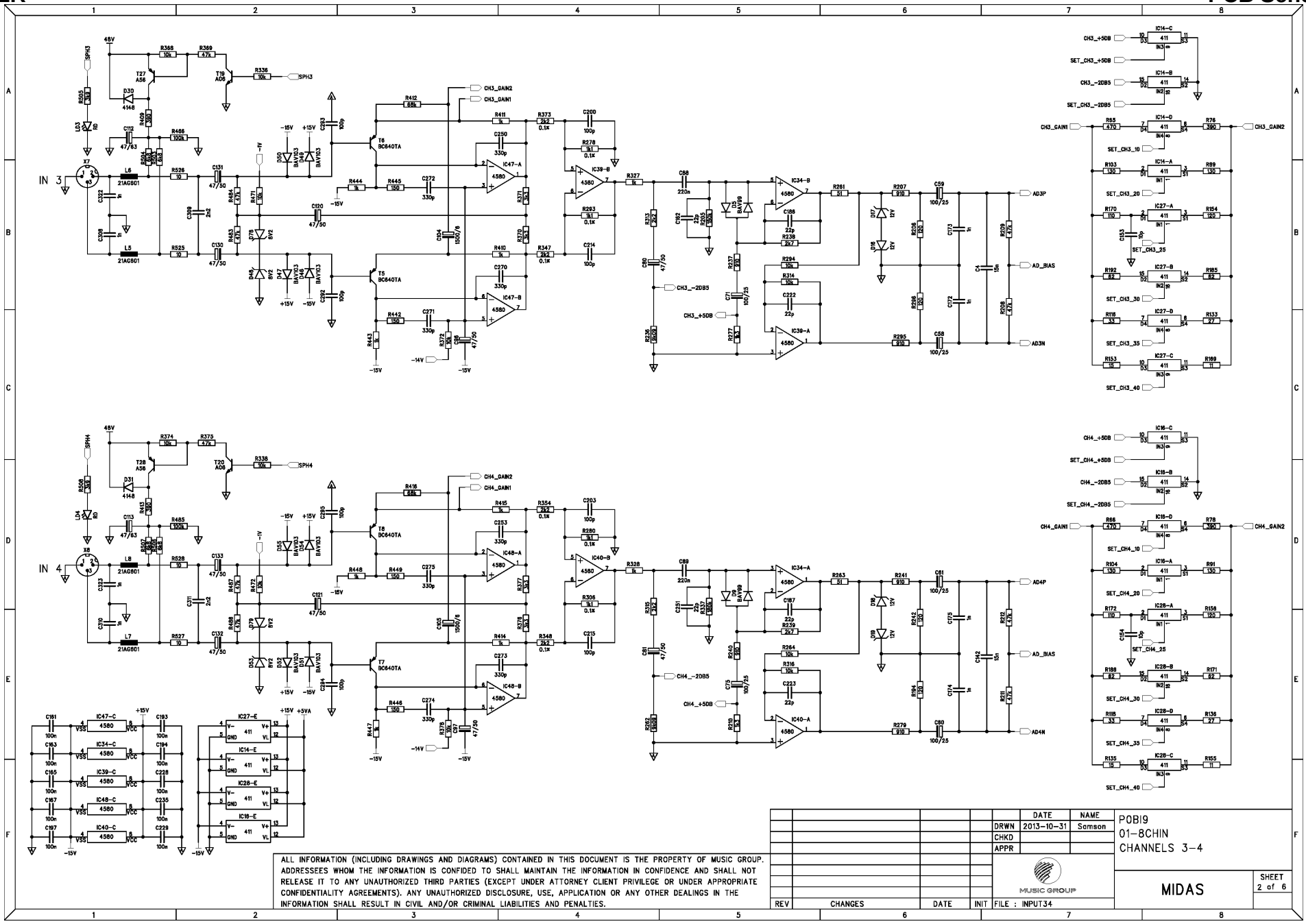
IN 3
IN 4
CH3_GAIN1
CH3_GAIN2
CH4_GAIN1
CH4_GAIN2
AD3P
AD3N
AD4P
AD4N
AD_BIAS
CH3_-2DB5
CH3_+5DB
CH4_-2DB5
CH4_+5DB
SET_CH3_40
SET_CH4_40
ALL INFORMATION (INCLUDING DRAWINGS AND DIAGRAMS) CONTAINED IN THIS DOCUMENT IS THE PROPERTY OF MUSIC GROUP. ADDRESSEES WHOM THE INFORMATION IS CONFIDED TO SHALL MAINTAIN THE INFORMATION IN CONFIDENCE AND SHALL NOT RELEASE IT TO ANY UNAUTHORIZED THIRD PARTIES (EXCEPT UNDER ATTORNEY CLIENT PRIVILEGE OR UNDER APPROPRIATE CONFIDENTIALITY AGREEMENTS). ANY UNAUTHORIZED DISCLOSURE, USE, APPLICATION OR ANY OTHER DEALINGS IN THE INFORMATION SHALL RESULT IN CIVIL AND/OR CRIMINAL LIABILITIES AND PENALTIES.
REV CHANGES DATE INIT
DRWN 2013-10-31 Samson
CHKD
APPR
FILE : INPUT34
POBI9
01-8CHIN
CHANNELS 3-4
MUSIC GROUP
MIDAS
SHEET 2 of 6

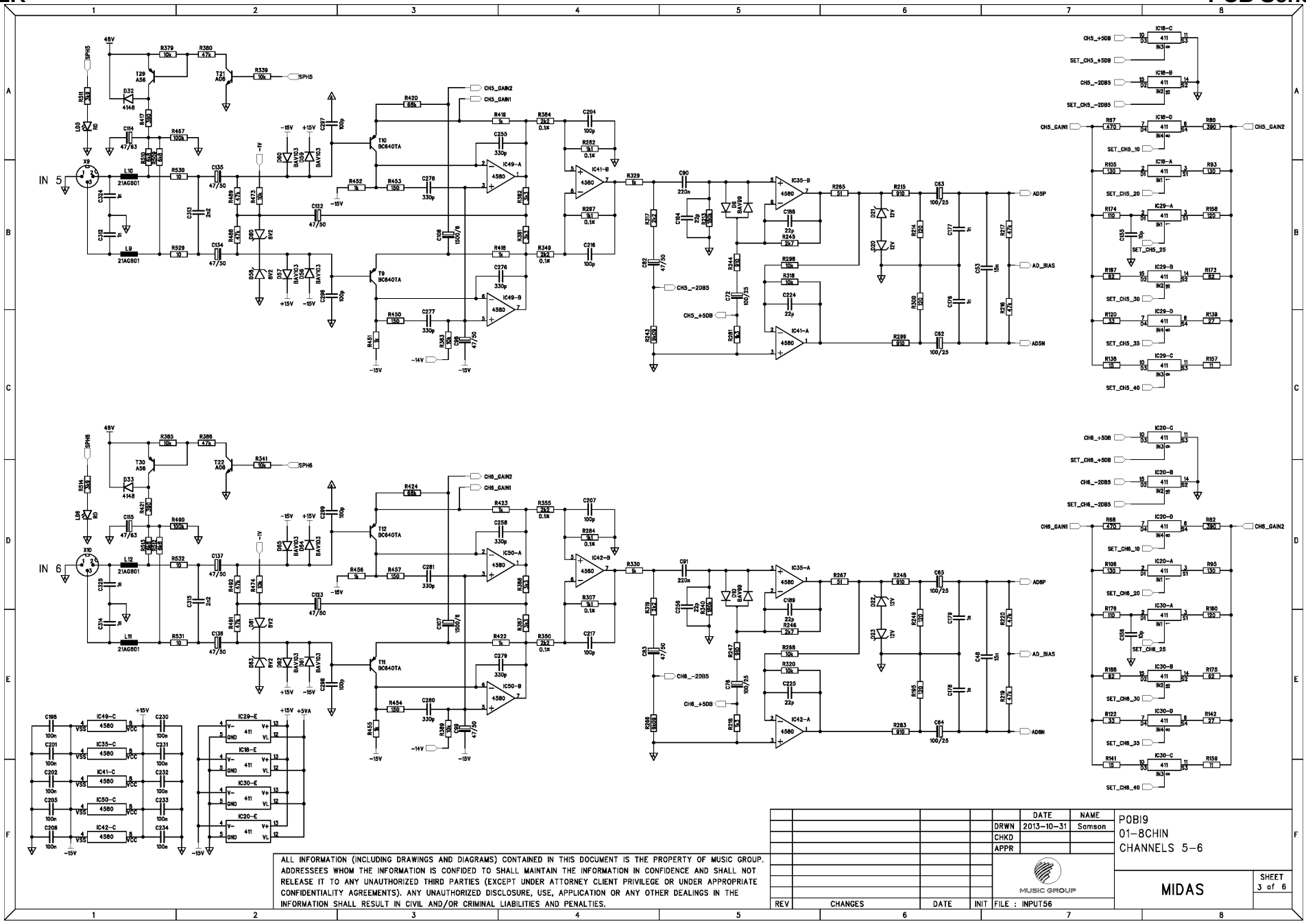
IN 5
IN 6
CH5_GAIN1
CH5_GAIN2
CH6_GAIN1
CH6_GAIN2
AD5P
AD5N
AD_BIAS
SET_CH5_40
SET_CH6_40
ALL INFORMATION (INCLUDING DRAWINGS AND DIAGRAMS) CONTAINED IN THIS DOCUMENT IS THE PROPERTY OF MUSIC GROUP. ADDRESSEES WHOM THE INFORMATION IS CONFIDED TO SHALL MAINTAIN THE INFORMATION IN CONFIDENCE AND SHALL NOT RELEASE IT TO ANY UNAUTHORIZED THIRD PARTIES (EXCEPT UNDER ATTORNEY CLIENT PRIVILEGE OR UNDER APPROPRIATE CONFIDENTIALITY AGREEMENTS). ANY UNAUTHORIZED DISCLOSURE, USE, APPLICATION OR ANY OTHER DEALINGS IN THE INFORMATION SHALL RESULT IN CIVIL AND/OR CRIMINAL LIABILITIES AND PENALTIES.
REV CHANGES DATE INIT
DRWN 2013-10-31 Samson
CHKD
APPR
FILE : INPUT56
POBI9
01-8CHIN
CHANNELS 5-6
MUSIC GROUP
MIDAS
SHEET 3 of 6

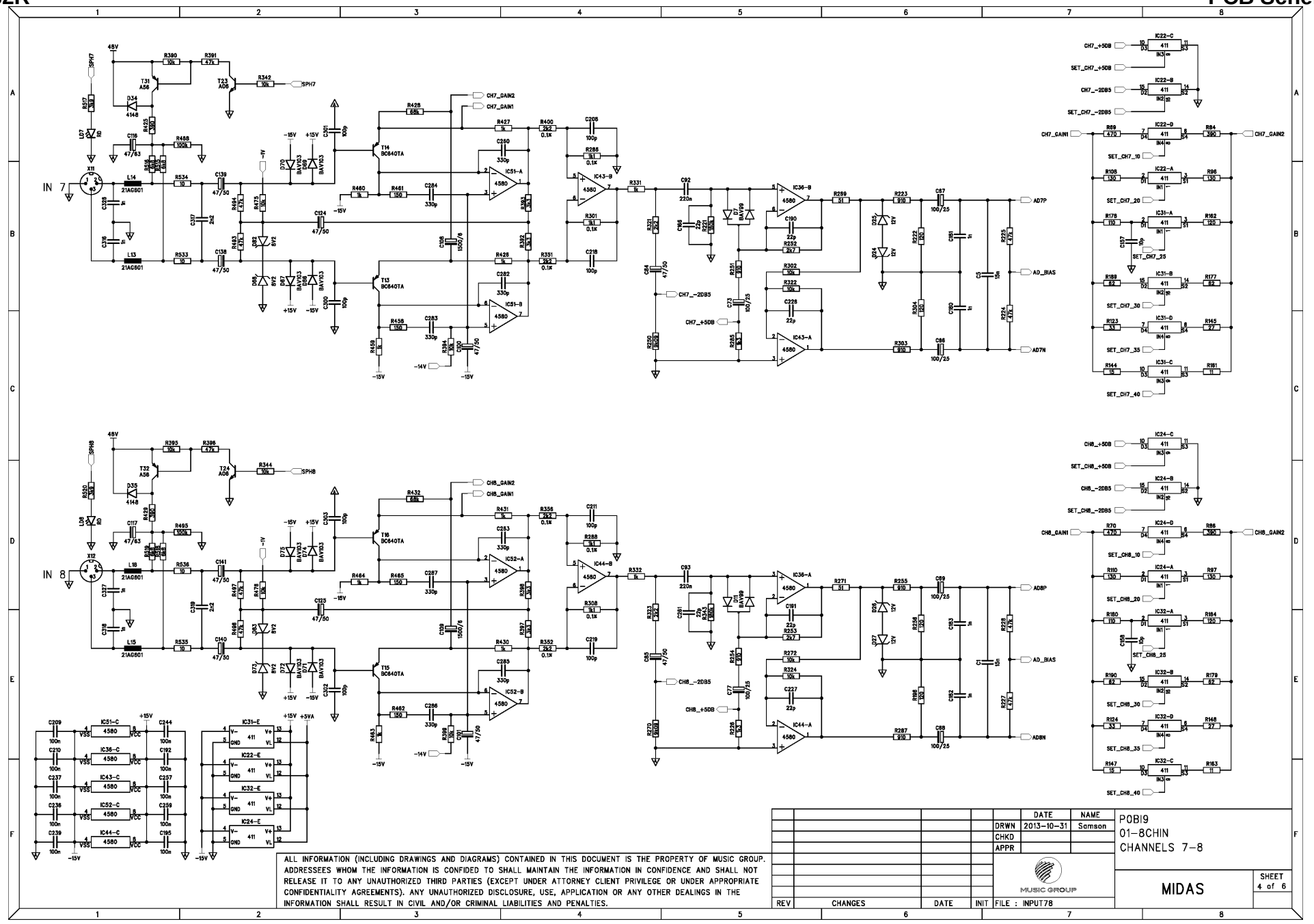
IN 7
IN 8
CH7_GAIN1
CH7_GAIN2
CH8_GAIN1
CH8_GAIN2
AD7P
AD7N
AD8P
AD8N
AD_BIAS
MIDAS
MUSIC GROUP
POBI9
01-8CHIN
CHANNELS 7-8
DRWN 2013-10-31 Samson
CHKD
APPR
SHEET 4 of 6
FILE : INPUT78
ALL INFORMATION (INCLUDING DRAWINGS AND DIAGRAMS) CONTAINED IN THIS DOCUMENT IS THE PROPERTY OF MUSIC GROUP. ADDRESSEES WHOM THE INFORMATION IS CONFIDED TO SHALL MAINTAIN THE INFORMATION IN CONFIDENCE AND SHALL NOT RELEASE IT TO ANY UNAUTHORIZED THIRD PARTIES (EXCEPT UNDER ATTORNEY CLIENT PRIVILEGE OR UNDER APPROPRIATE CONFIDENTIALITY AGREEMENTS). ANY UNAUTHORIZED DISCLOSURE, USE, APPLICATION OR ANY OTHER DEALINGS IN THE INFORMATION SHALL RESULT IN CIVIL AND/OR CRIMINAL LIABILITIES AND PENALTIES.
REV CHANGES DATE INIT

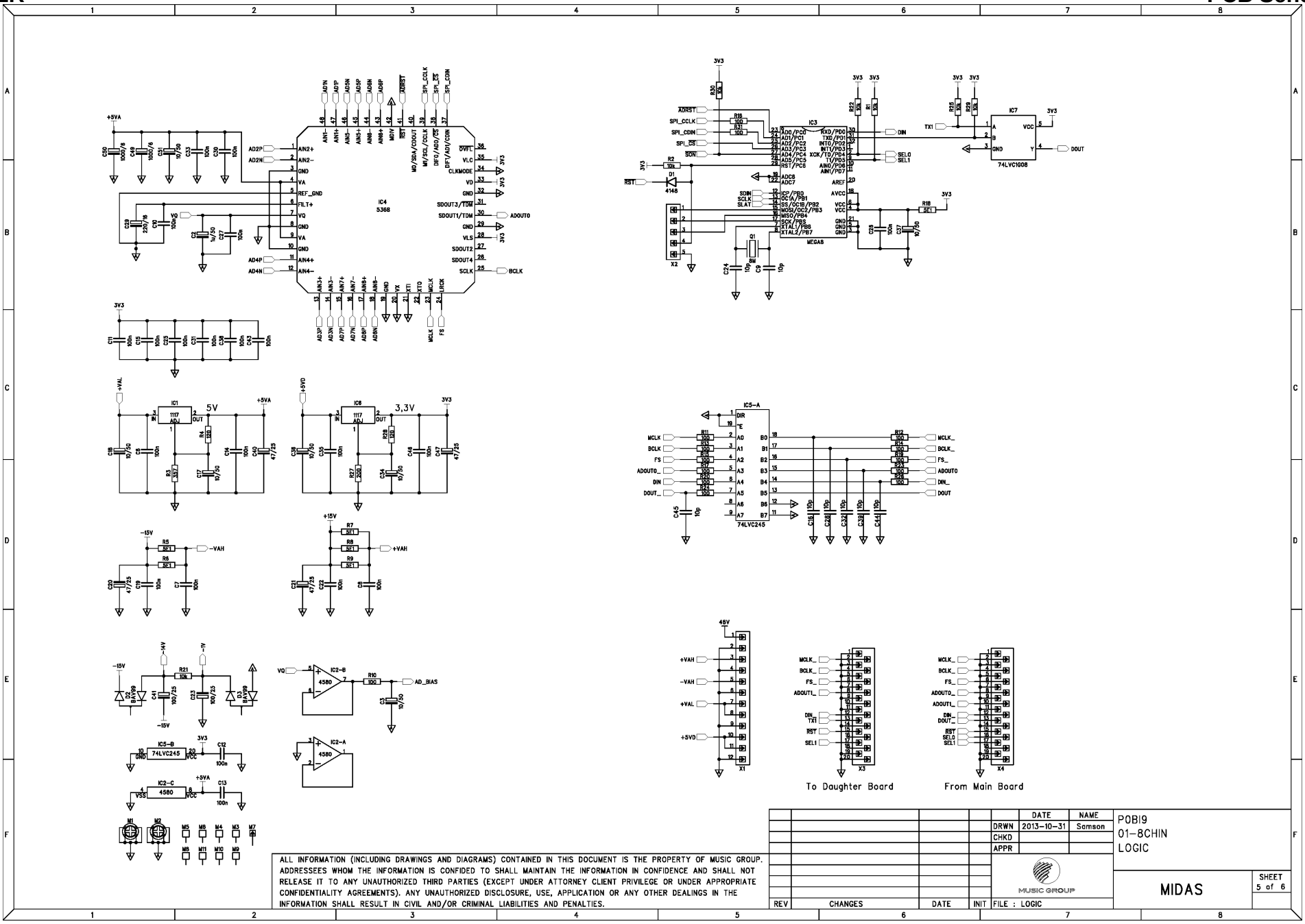

ALL INFORMATION (INCLUDING DRAWINGS AND DIAGRAMS) CONTAINED IN THIS DOCUMENT IS THE PROPERTY OF MUSIC GROUP. ADDRESSEES WHOM THE INFORMATION IS CONFIDED TO SHALL MAINTAIN THE INFORMATION IN CONFIDENCE AND SHALL NOT RELEASE IT TO ANY UNAUTHORIZED THIRD PARTIES (EXCEPT UNDER ATTORNEY CLIENT PRIVILEGE OR UNDER APPROPRIATE CONFIDENTIALITY AGREEMENTS). ANY UNAUTHORIZED DISCLOSURE, USE, APPLICATION OR ANY OTHER DEALINGS IN THE INFORMATION SHALL RESULT IN CIVIL AND/OR CRIMINAL LIABILITIES AND PENALTIES.

REV	CHANGES	DATE	INIT

	DATE	NAME
DRWN	2013-10-31	Samson
CHKD		
APPR		

POB19
01-8CHIN
LOGIC

MUSIC GROUP

MIDAS

SHEET 5 of 6

FILE : LOGIC

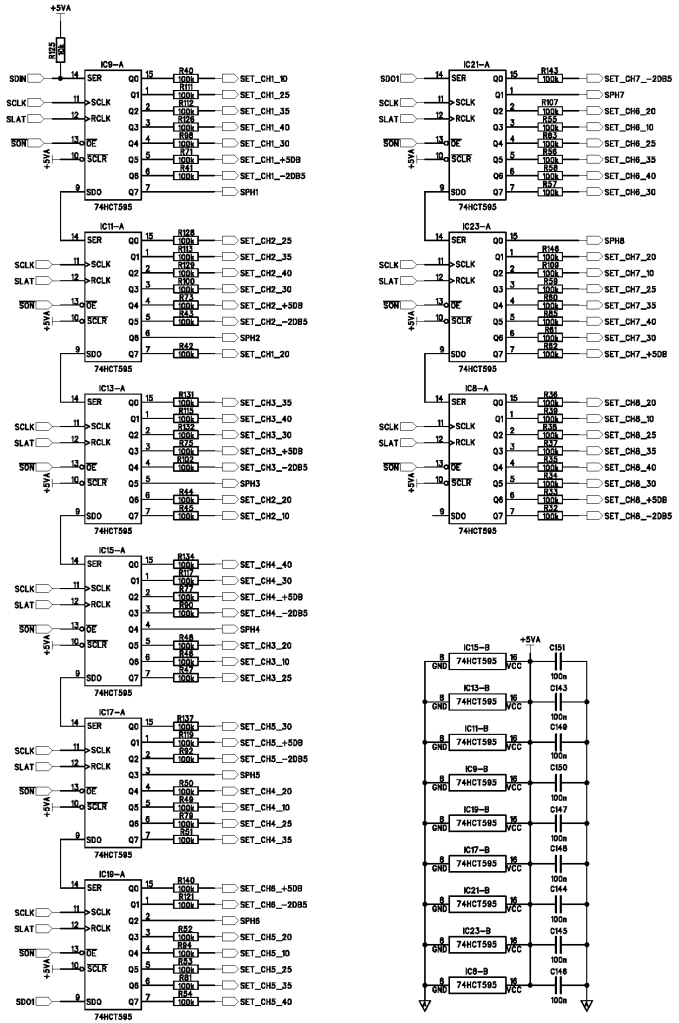

ALL INFORMATION (INCLUDING DRAWINGS AND DIAGRAMS) CONTAINED IN THIS DOCUMENT IS THE PROPERTY OF MUSIC GROUP. ADDRESSEES WHOM THE INFORMATION IS CONFIDED TO SHALL MAINTAIN THE INFORMATION IN CONFIDENCE AND SHALL NOT RELEASE IT TO ANY UNAUTHORIZED THIRD PARTIES (EXCEPT UNDER ATTORNEY CLIENT PRIVILEGE OR UNDER APPROPRIATE CONFIDENTIALITY AGREEMENTS). ANY UNAUTHORIZED DISCLOSURE, USE, APPLICATION OR ANY OTHER DEALINGS IN THE INFORMATION SHALL RESULT IN CIVIL AND/OR CRIMINAL LIABILITIES AND PENALTIES.

REV	CHANGES	DATE	INIT

	DATE	NAME
DRWN	2013-10-31	Samson
CHKD		
APPR		

MUSIC GROUP

FILE : CONTROL

POBI9
01-8CHIN
CONTROL

MIDAS

SHEET 6 of 6

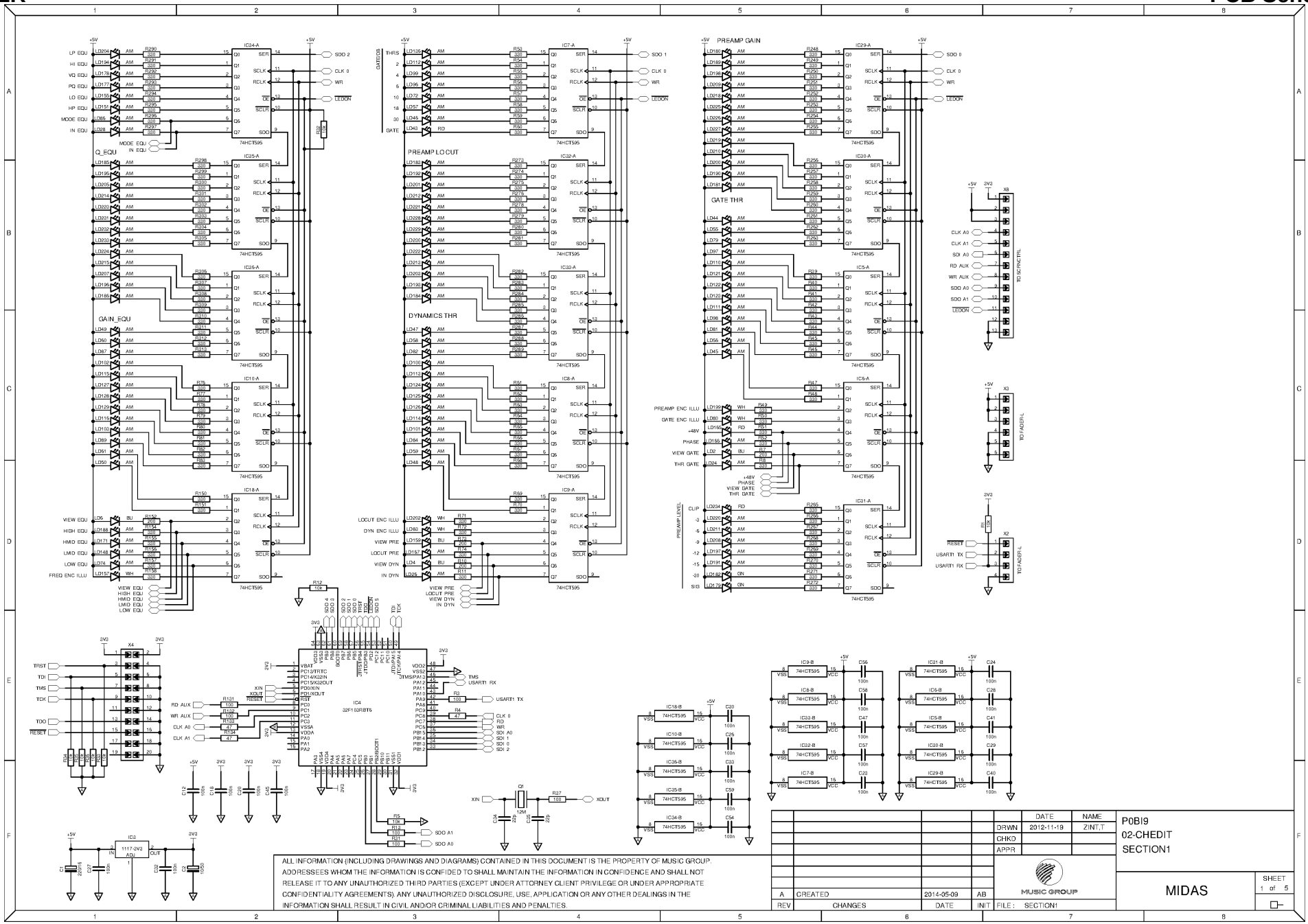
PREAMP GAIN
PREAMP LO CUT
GATE THR
DYNAMICS THR
GAIN_EQU
Q_EQU
74HCT595
IC4
32F103RBT6
IC3
1117-3V3 ADJ
ALL INFORMATION (INCLUDING DRAWINGS AND DIAGRAMS) CONTAINED IN THIS DOCUMENT IS THE PROPERTY OF MUSIC GROUP.
ADDRESSEES WHOM THE INFORMATION IS CONFIDED TO SHALL MAINTAIN THE INFORMATION IN CONFIDENCE AND SHALL NOT
RELEASE IT TO ANY UNAUTHORIZED THIRD PARTIES (EXCEPT UNDER ATTORNEY CLIENT PRIVILEGE OR UNDER APPROPRIATE
CONFIDENTIALITY AGREEMENTS). ANY UNAUTHORIZED DISCLOSURE, USE, APPLICATION OR ANY OTHER DEALINGS IN THE
INFORMATION SHALL RESULT IN CIVIL AND/OR CRIMINAL LIABILITIES AND PENALTIES.
DRWN 2012-11-19 ZINT,T
CHKD
APPR
P0BI9
02-CHEDIT
SECTION1
A CREATED 2014-05-09 AB
REV CHANGES DATE INIT
MUSIC GROUP
MIDAS
SHEET 1 of 5
FILE : SECTION1

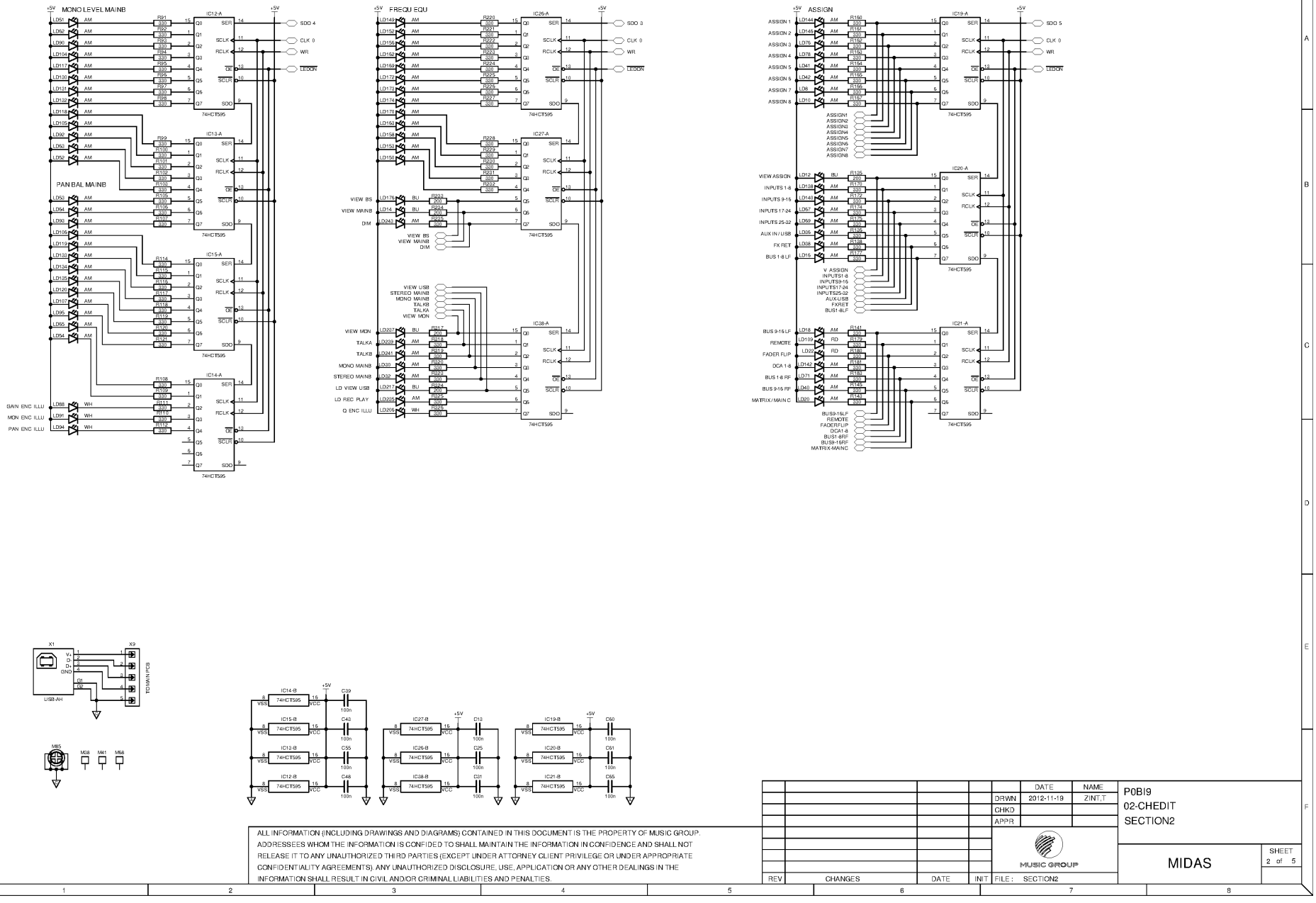

ALL INFORMATION (INCLUDING DRAWINGS AND DIAGRAMS) CONTAINED IN THIS DOCUMENT IS THE PROPERTY OF MUSIC GROUP. ADDRESSEES WHOM THE INFORMATION IS CONFIDED TO SHALL MAINTAIN THE INFORMATION IN CONFIDENCE AND SHALL NOT RELEASE IT TO ANY UNAUTHORIZED THIRD PARTIES (EXCEPT UNDER ATTORNEY CLIENT PRIVILEGE OR UNDER APPROPRIATE CONFIDENTIALITY AGREEMENTS). ANY UNAUTHORIZED DISCLOSURE, USE, APPLICATION OR ANY OTHER DEALINGS IN THE INFORMATION SHALL RESULT IN CIVIL AND/OR CRIMINAL LIABILITIES AND PENALTIES.

REV	CHANGES	DATE	INIT

	DATE	NAME
DRWN	2012-11-19	ZINT,T
CHKD		
APPR		

P0BI9
02-CHEDIT
SECTION2

MUSIC GROUP

FILE : SECTION2

MIDAS

SHEET 2 of 5

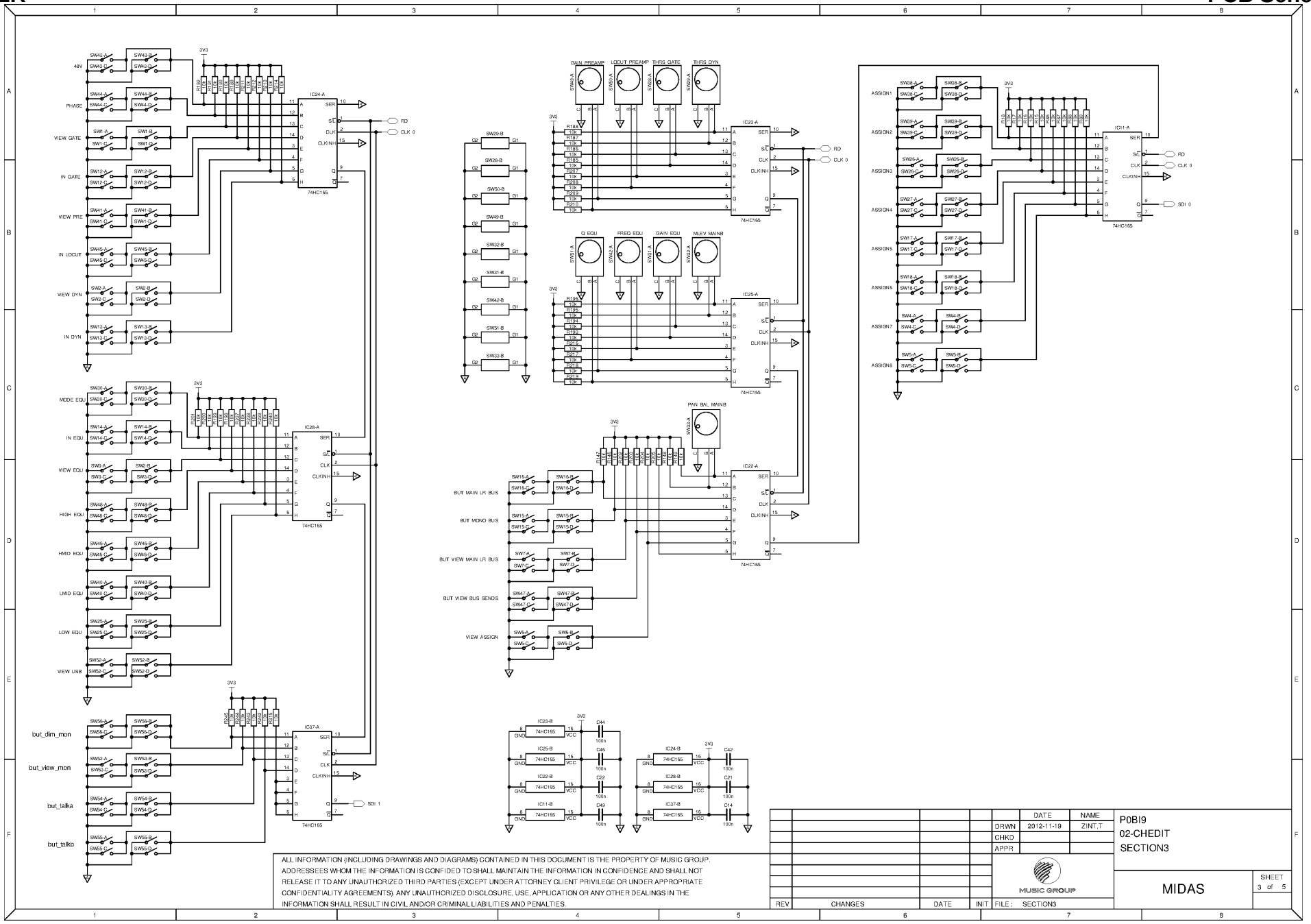
48V
PHASE
VIEW GATE
IN GATE
VIEW PRE
IN LOCUT
VIEW DYN
IN DYN
MODE EQU
IN EQU
VIEW EQU
HIGH EQU
HMID EQU
LMID EQU
LOW EQU
VIEW USB
but_dim_mon
but_view_mon
but_talka
but_talkb
GAIN PREAMP
LOCUT PREAMP
THRS GATE
THRS DYN
Q EQU
FREQ EQU
GAIN EQU
MLEV MAINB
PAN BAL MAINB
BUT MAIN LR BUS
BUT MONO BUS
BUT VIEW MAIN LR BUS
BUT VIEW BUS SENDS
VIEW ASSIGN
ASSIGN1
ASSIGN2
ASSIGN3
ASSIGN4
ASSIGN5
ASSIGN6
ASSIGN7
ASSIGN8
74HC165
RD
CLK 0
SDI 0
SDI 1
ALL INFORMATION (INCLUDING DRAWINGS AND DIAGRAMS) CONTAINED IN THIS DOCUMENT IS THE PROPERTY OF MUSIC GROUP. ADDRESSEES WHOM THE INFORMATION IS CONFIDED TO SHALL MAINTAIN THE INFORMATION IN CONFIDENCE AND SHALL NOT RELEASE IT TO ANY UNAUTHORIZED THIRD PARTIES (EXCEPT UNDER ATTORNEY CLIENT PRIVILEGE OR UNDER APPROPRIATE CONFIDENTIALITY AGREEMENTS). ANY UNAUTHORIZED DISCLOSURE, USE, APPLICATION OR ANY OTHER DEALINGS IN THE INFORMATION SHALL RESULT IN CIVIL AND/OR CRIMINAL LIABILITIES AND PENALTIES.
DATE
NAME
DRWN 2012-11-19 ZINT,T
CHKD
APPR
P0BI9
02-CHEDIT
SECTION3
MUSIC GROUP
MIDAS
SHEET 3 of 5
REV
CHANGES
DATE
INIT
FILE : SECTION3

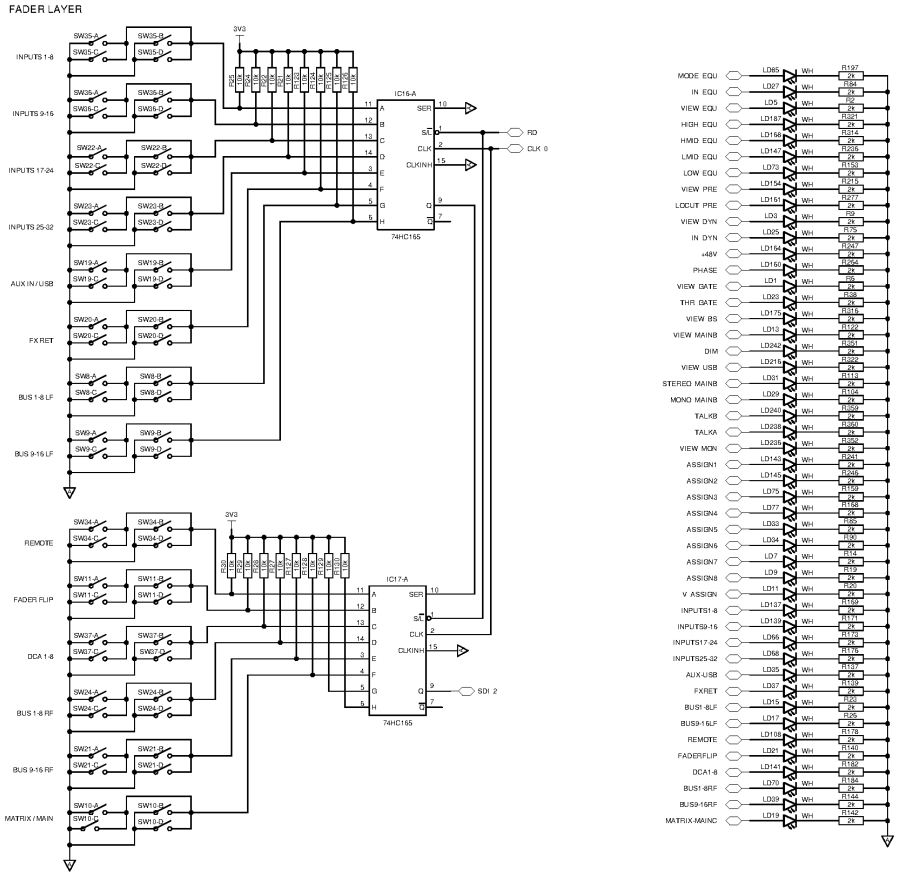

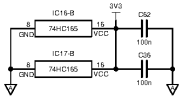

ALL INFORMATION (INCLUDING DRAWINGS AND DIAGRAMS) CONTAINED IN THIS DOCUMENT IS THE PROPERTY OF MUSIC GROUP. ADDRESSEES WHOM THE INFORMATION IS CONFIDED TO SHALL MAINTAIN THE INFORMATION IN CONFIDENCE AND SHALL NOT RELEASE IT TO ANY UNAUTHORIZED THIRD PARTIES (EXCEPT UNDER ATTORNEY CLIENT PRIVILEGE OR UNDER APPROPRIATE CONFIDENTIALITY AGREEMENTS). ANY UNAUTHORIZED DISCLOSURE, USE, APPLICATION OR ANY OTHER DEALINGS IN THE INFORMATION SHALL RESULT IN CIVIL AND/OR CRIMINAL LIABILITIES AND PENALTIES.

REV	CHANGES	DATE	INIT

	DATE	NAME
DRWN	2012-11-19	ZINT,T
CHKD		
APPR		

MUSIC GROUP

FILE : SECTION4

P0BI9
02-CHEDIT
SECTION4

MIDAS

SHEET 4 of 5

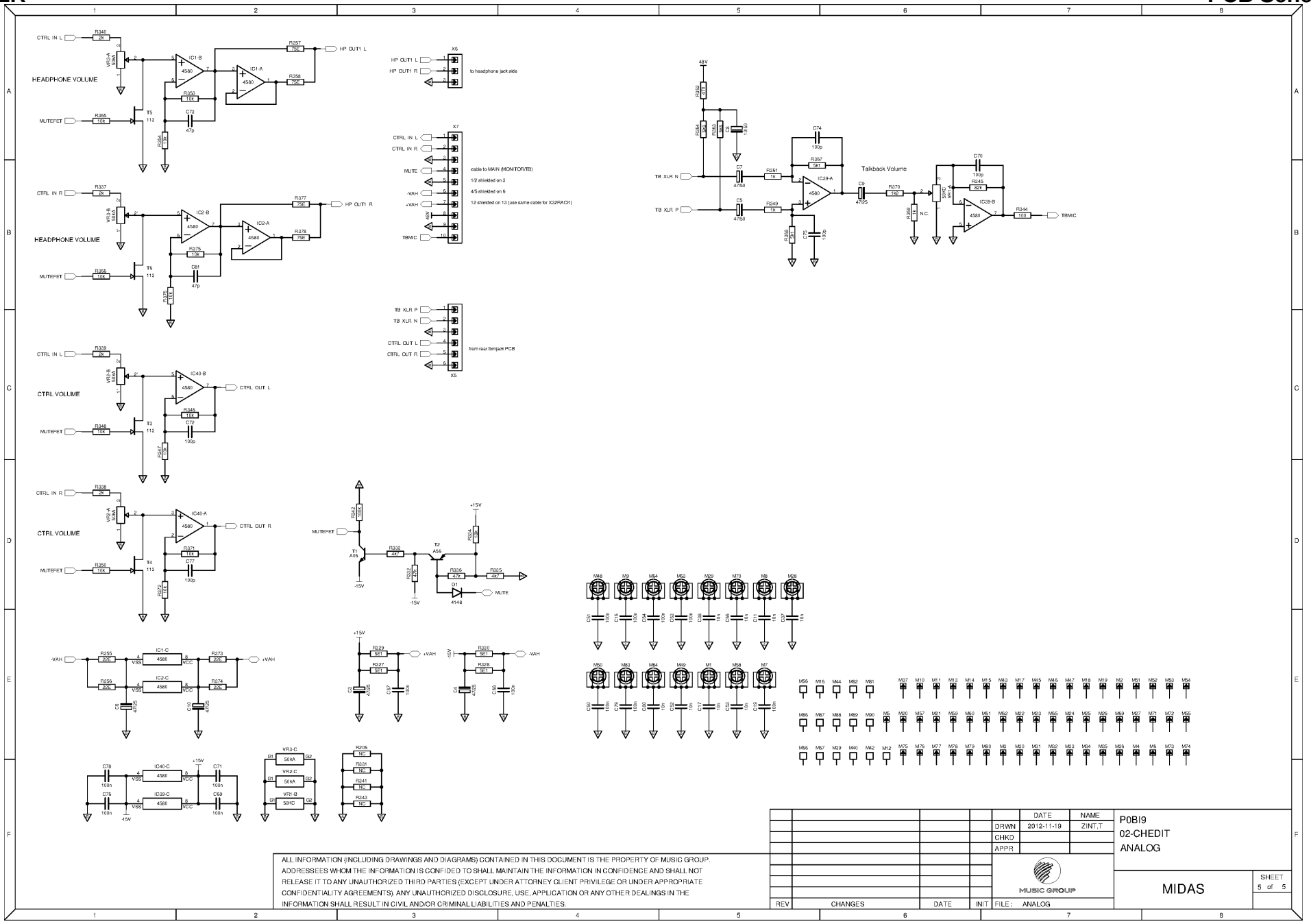

ALL INFORMATION (INCLUDING DRAWINGS AND DIAGRAMS) CONTAINED IN THIS DOCUMENT IS THE PROPERTY OF MUSIC GROUP. ADDRESSEES WHOM THE INFORMATION IS CONFIDED TO SHALL MAINTAIN THE INFORMATION IN CONFIDENCE AND SHALL NOT RELEASE IT TO ANY UNAUTHORIZED THIRD PARTIES (EXCEPT UNDER ATTORNEY CLIENT PRIVILEGE OR UNDER APPROPRIATE CONFIDENTIALITY AGREEMENTS). ANY UNAUTHORIZED DISCLOSURE, USE, APPLICATION OR ANY OTHER DEALINGS IN THE INFORMATION SHALL RESULT IN CIVIL AND/OR CRIMINAL LIABILITIES AND PENALTIES.

REV	CHANGES	DATE	INIT

	DATE	NAME
DRWN	2012-11-19	ZINT,T
CHKD		
APPR		

P0BI9
02-CHEDIT
ANALOG

FILE : ANALOG

MUSIC GROUP

MIDAS

SHEET 5 of 5

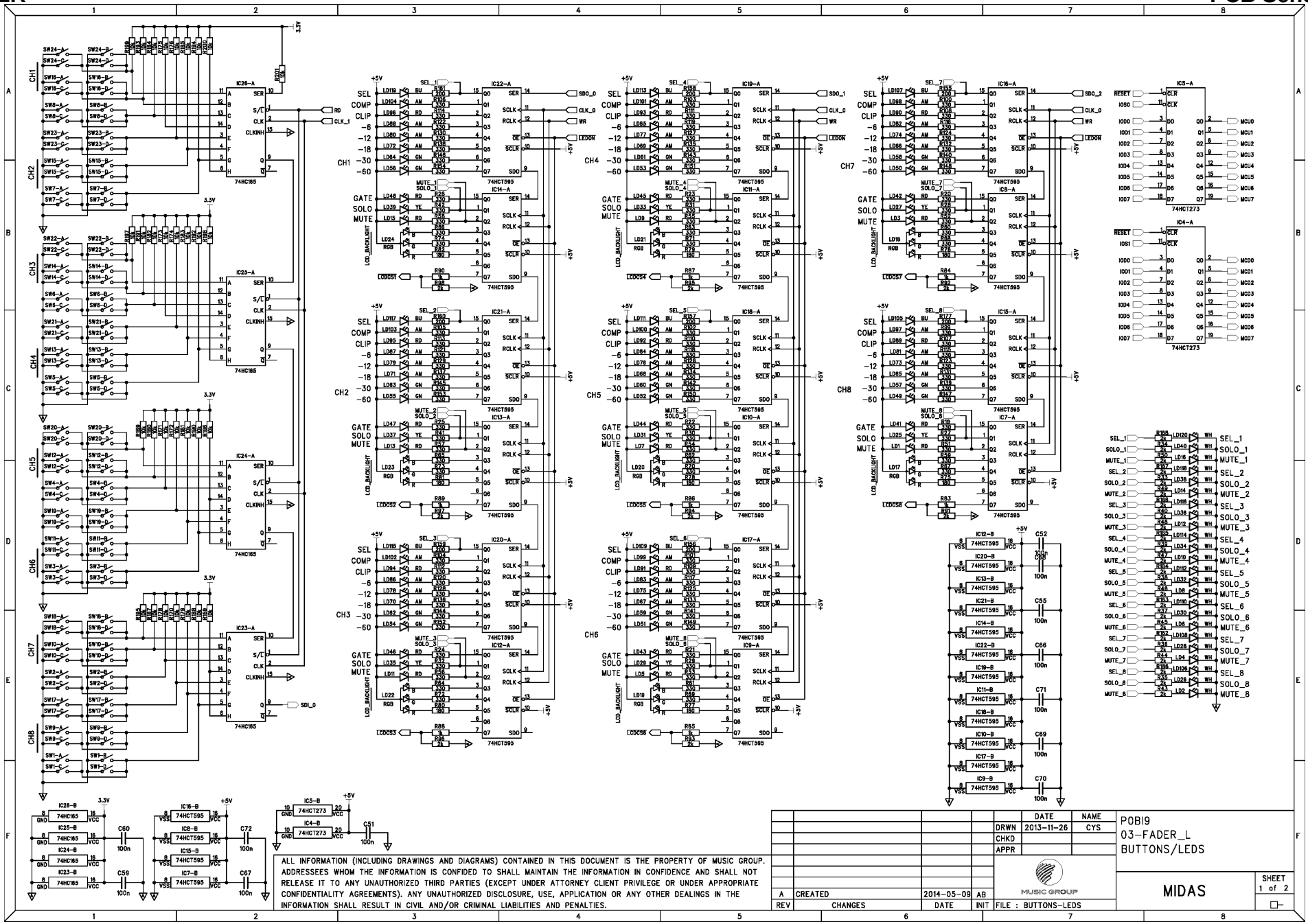
ALL INFORMATION (INCLUDING DRAWINGS AND DIAGRAMS) CONTAINED IN THIS DOCUMENT IS THE PROPERTY OF MUSIC GROUP. ADDRESSEES WHOM THE INFORMATION IS CONFIDED TO SHALL MAINTAIN THE INFORMATION IN CONFIDENCE AND SHALL NOT RELEASE IT TO ANY UNAUTHORIZED THIRD PARTIES (EXCEPT UNDER ATTORNEY CLIENT PRIVILEGE OR UNDER APPROPRIATE CONFIDENTIALITY AGREEMENTS). ANY UNAUTHORIZED DISCLOSURE, USE, APPLICATION OR ANY OTHER DEALINGS IN THE INFORMATION SHALL RESULT IN CIVIL AND/OR CRIMINAL LIABILITIES AND PENALTIES.
DRWN 2013-11-26 CYS
CHKD
APPR
A CREATED 2014-05-09 AB
REV CHANGES DATE INIT
FILE : BUTTONS-LEDS
MUSIC GROUP
POBI9
03-FADER_L
BUTTONS/LEDS
MIDAS
SHEET 1 of 2

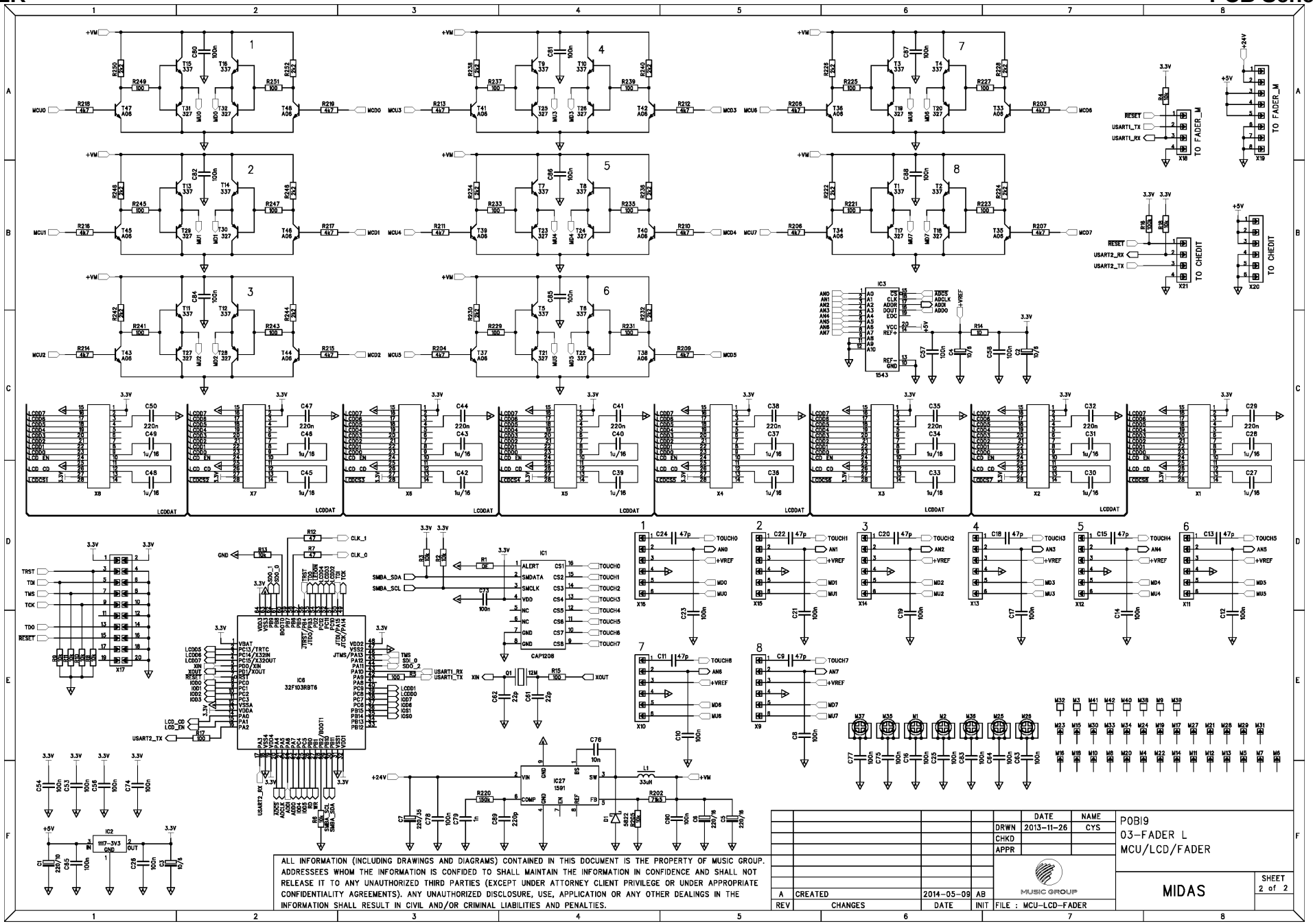
ALL INFORMATION (INCLUDING DRAWINGS AND DIAGRAMS) CONTAINED IN THIS DOCUMENT IS THE PROPERTY OF MUSIC GROUP. ADDRESSEES WHOM THE INFORMATION IS CONFIDED TO SHALL MAINTAIN THE INFORMATION IN CONFIDENCE AND SHALL NOT RELEASE IT TO ANY UNAUTHORIZED THIRD PARTIES (EXCEPT UNDER ATTORNEY CLIENT PRIVILEGE OR UNDER APPROPRIATE CONFIDENTIALITY AGREEMENTS). ANY UNAUTHORIZED DISCLOSURE, USE, APPLICATION OR ANY OTHER DEALINGS IN THE INFORMATION SHALL RESULT IN CIVIL AND/OR CRIMINAL LIABILITIES AND PENALTIES.
DATE
NAME
DRWN 2013-11-26 CYS
CHKD
APPR
POBI9
03-FADER L
MCU/LCD/FADER
A CREATED 2014-05-09 AB
REV CHANGES DATE INIT
FILE : MCU-LCD-FADER
MUSIC GROUP
MIDAS
SHEET 2 of 2

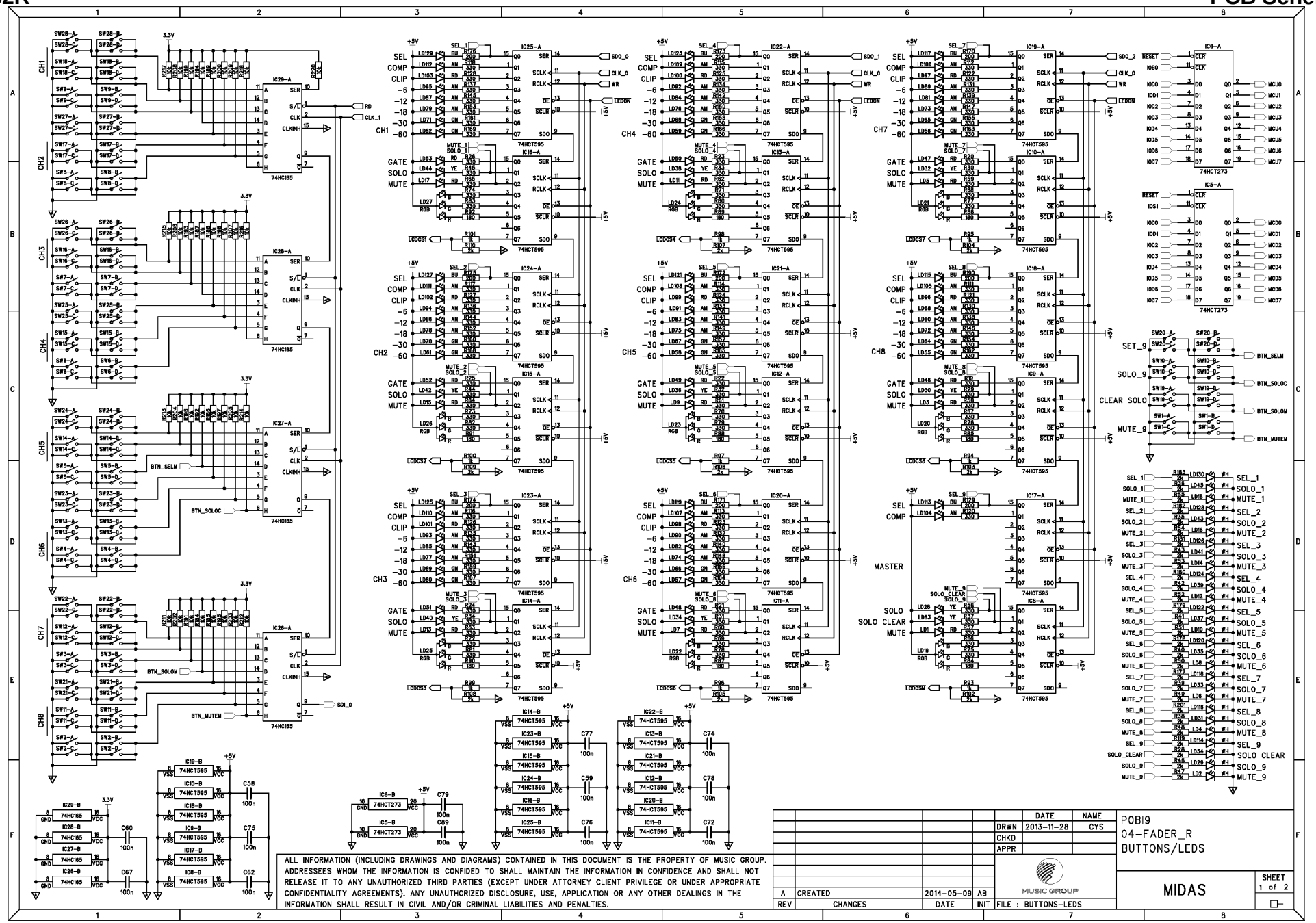
CH1
CH2
CH3
CH4
CH5
CH6
CH7
CH8
SEL
COMP
CLIP
GATE
SOLO
MUTE
MASTER
SOLO CLEAR
SET_9
SOLO_9
CLEAR SOLO
MUTE_9
BTN_SELM
BTN_SOLOC
BTN_SOLOM
BTN_MUTEM
74HCT595
74HC165
74HCT273
ALL INFORMATION (INCLUDING DRAWINGS AND DIAGRAMS) CONTAINED IN THIS DOCUMENT IS THE PROPERTY OF MUSIC GROUP. ADDRESSEES WHOM THE INFORMATION IS CONFIDED TO SHALL MAINTAIN THE INFORMATION IN CONFIDENCE AND SHALL NOT RELEASE IT TO ANY UNAUTHORIZED THIRD PARTIES (EXCEPT UNDER ATTORNEY CLIENT PRIVILEGE OR ANOTHER APPROPRIATE CONFIDENTIALITY AGREEMENTS). ANY UNAUTHORIZED DISCLOSURE, USE, APPLICATION OR ANY OTHER DEALINGS IN THE INFORMATION SHALL RESULT IN CIVIL AND/OR CRIMINAL LIABILITIES AND PENALTIES.
DRWN 2013-11-28 CYS
CHKD
APPR
POBI9
04-FADER_R
BUTTONS/LEDS
A CREATED 2014-05-09 AB
REV CHANGES DATE INIT
FILE : BUTTONS-LEDS
MUSIC GROUP
MIDAS
SHEET 1 of 2

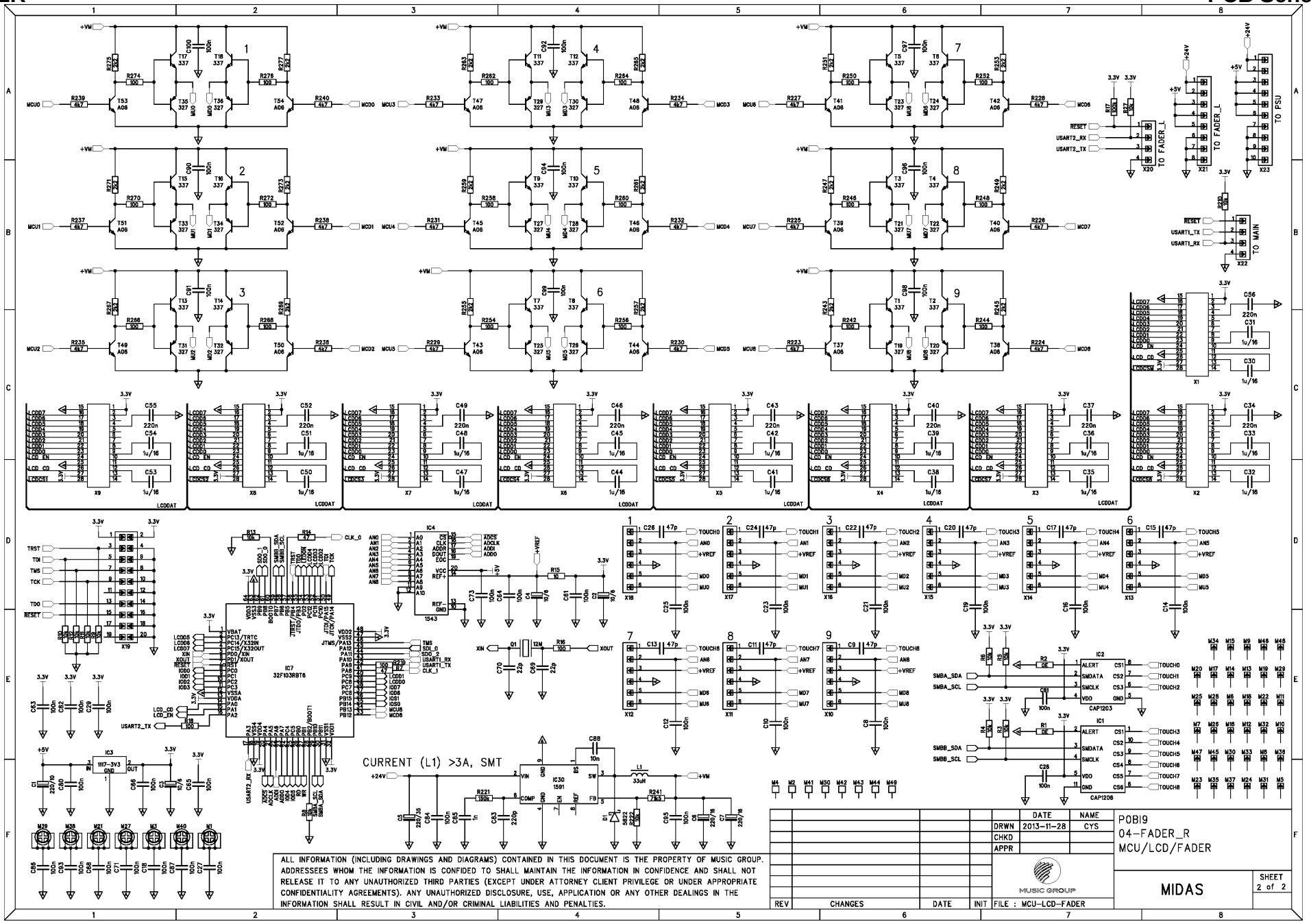
CURRENT (L1) >3A, SMT
TO FADER_L
TO FADER_L
TO PSU
TO MAIN
MIDAS
POBI9
04-FADER_R
MCU/LCD/FADER
DRWN 2013-11-28 CYS
CHKD
APPR
SHEET 2 of 2
FILE : MCU-LCD-FADER
ALL INFORMATION (INCLUDING DRAWINGS AND DIAGRAMS) CONTAINED IN THIS DOCUMENT IS THE PROPERTY OF MUSIC GROUP. ADDRESSEES WHOM THE INFORMATION IS CONFIDED TO SHALL MAINTAIN THE INFORMATION IN CONFIDENCE AND SHALL NOT RELEASE IT TO ANY UNAUTHORIZED THIRD PARTIES (EXCEPT UNDER ATTORNEY CLIENT PRIVILEGE OR UNDER APPROPRIATE CONFIDENTIALITY AGREEMENTS). ANY UNAUTHORIZED DISCLOSURE, USE, APPLICATION OR ANY OTHER DEALINGS IN THE INFORMATION SHALL RESULT IN CIVIL AND/OR CRIMINAL LIABILITIES AND PENALTIES.

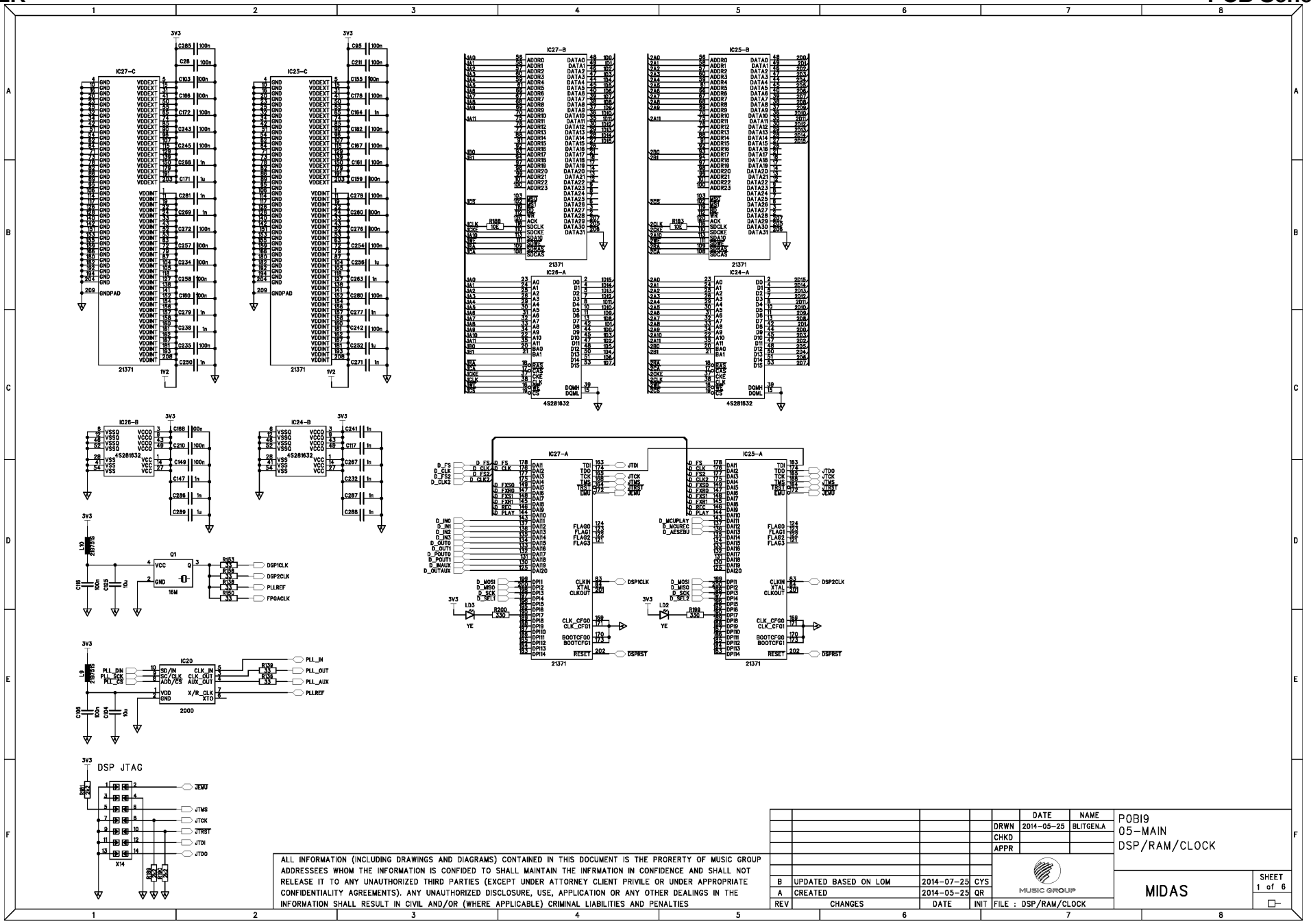
IC27-C
IC25-C
IC27-B
IC25-B
IC26-A
IC24-A
IC26-B
IC24-B
IC27-A
IC25-A
IC20
DSP JTAG
ALL INFORMATION (INCLUDING DRAWINGS AND DIAGRAMS) CONTAINED IN THIS DOCUMENT IS THE PRORERTY OF MUSIC GROUP ADDRESSEES WHOM THE INFORMATION IS CONFIDED TO SHALL MAINTAIN THE INFRMATION IN CONFIDENCE AND SHALL NOT RELEASE IT TO ANY UNAUTHORIZED THIRD PARTIES (EXCEPT UNDER ATTORNEY CLIENT PRIVILE OR UNDER APPROPRIATE CONFIDENTIALITY AGREEMENTS). ANY UNAUTHORIZED DISCLOSURE, USE, APPLICATION OR ANY OTHER DEALINGS IN THE INFORMATION SHALL RESULT IN CIVIL AND/OR (WHERE APPLICABLE) CRIMINAL LIABILITIES AND PENALTIES
B UPDATED BASED ON LOM 2014-07-25 CYS
A CREATED 2014-05-25 QR
REV CHANGES DATE INIT
DATE NAME
DRWN 2014-05-25 BLITGEN.A
CHKD
APPR
MUSIC GROUP
FILE : DSP/RAM/CLOCK
POBI9
05-MAIN
DSP/RAM/CLOCK
MIDAS
SHEET 1 of 6

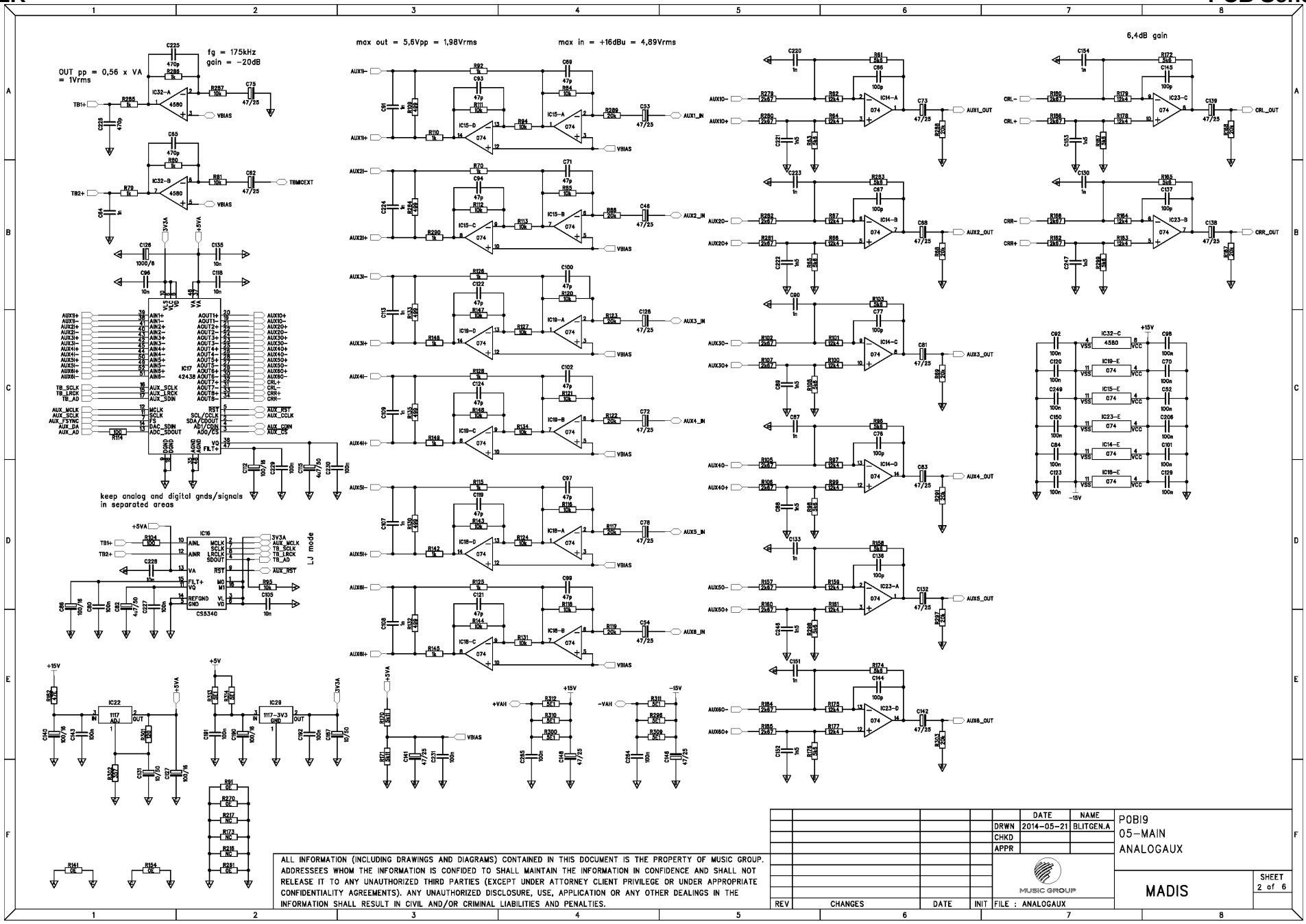

ALL INFORMATION (INCLUDING DRAWINGS AND DIAGRAMS) CONTAINED IN THIS DOCUMENT IS THE PROPERTY OF MUSIC GROUP. ADDRESSEES WHOM THE INFORMATION IS CONFIDED TO SHALL MAINTAIN THE INFORMATION IN CONFIDENCE AND SHALL NOT RELEASE IT TO ANY UNAUTHORIZED THIRD PARTIES (EXCEPT UNDER ATTORNEY CLIENT PRIVILEGE OR UNDER APPROPRIATE CONFIDENTIALITY AGREEMENTS). ANY UNAUTHORIZED DISCLOSURE, USE, APPLICATION OR ANY OTHER DEALINGS IN THE INFORMATION SHALL RESULT IN CIVIL AND/OR CRIMINAL LIABILITIES AND PENALTIES.

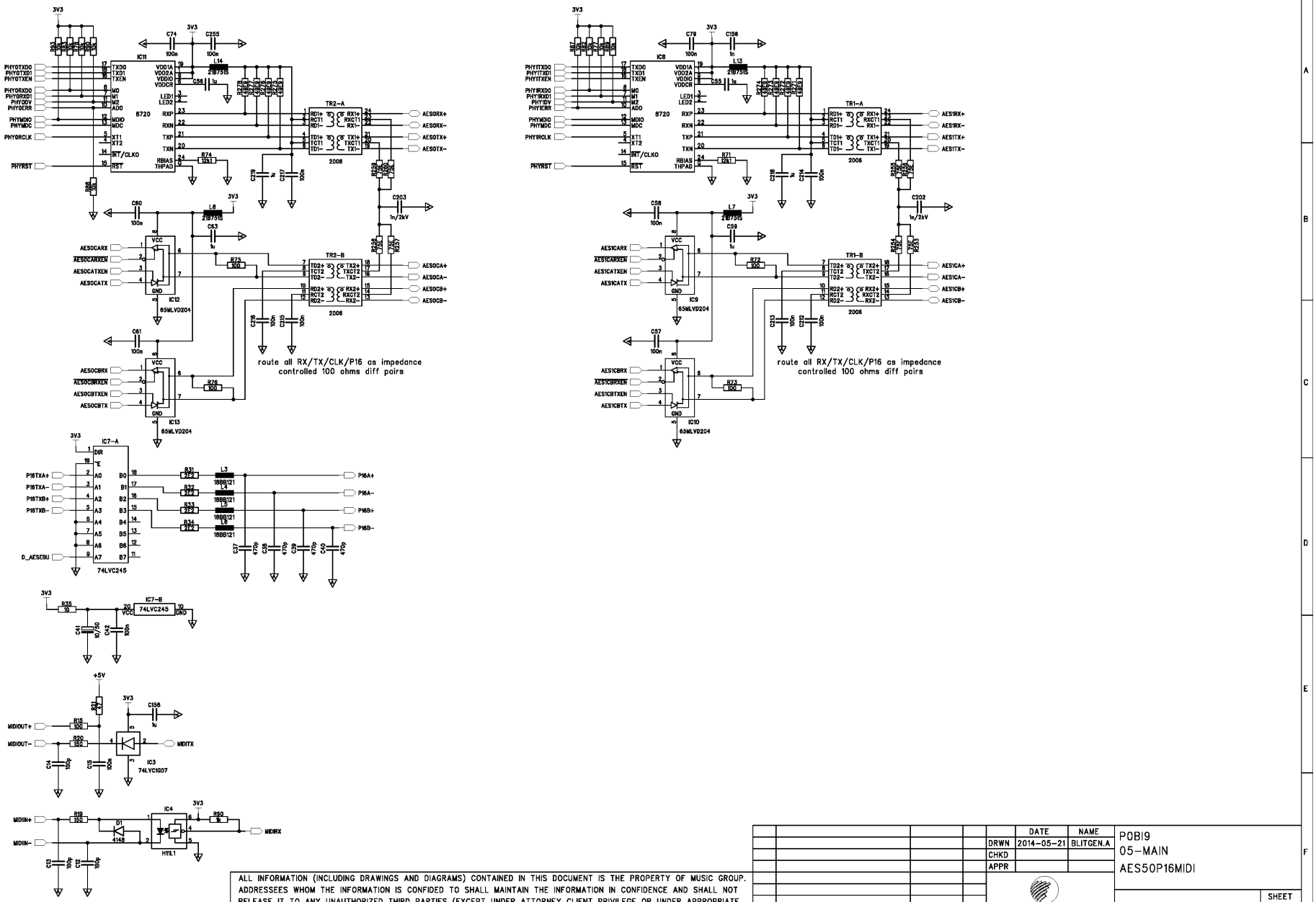
route all RX/TX/CLK/P16 as impedance controlled 100 ohms diff pairs
route all RX/TX/CLK/P16 as impedance controlled 100 ohms diff pairs
ALL INFORMATION (INCLUDING DRAWINGS AND DIAGRAMS) CONTAINED IN THIS DOCUMENT IS THE PROPERTY OF MUSIC GROUP. ADDRESSEES WHOM THE INFORMATION IS CONFIDED TO SHALL MAINTAIN THE INFORMATION IN CONFIDENCE AND SHALL NOT RELEASE IT TO ANY UNAUTHORIZED THIRD PARTIES (EXCEPT UNDER ATTORNEY CLIENT PRIVILEGE OR UNDER APPROPRIATE CONFIDENTIALITY AGREEMENTS). ANY UNAUTHORIZED DISCLOSURE, USE, APPLICATION OR ANY OTHER DEALINGS IN THE INFORMATION SHALL RESULT IN CIVIL AND/OR CRIMINAL LIABILITIES AND PENALTIES.
REV CHANGES DATE INIT
DRWN 2014-05-21 BLITGEN.A
CHKD
APPR
FILE : AES50P16MIDI
MUSIC GROUP
P0BI9
05-MAIN
AES50P16MIDI
MADIS
SHEET 3 of 6

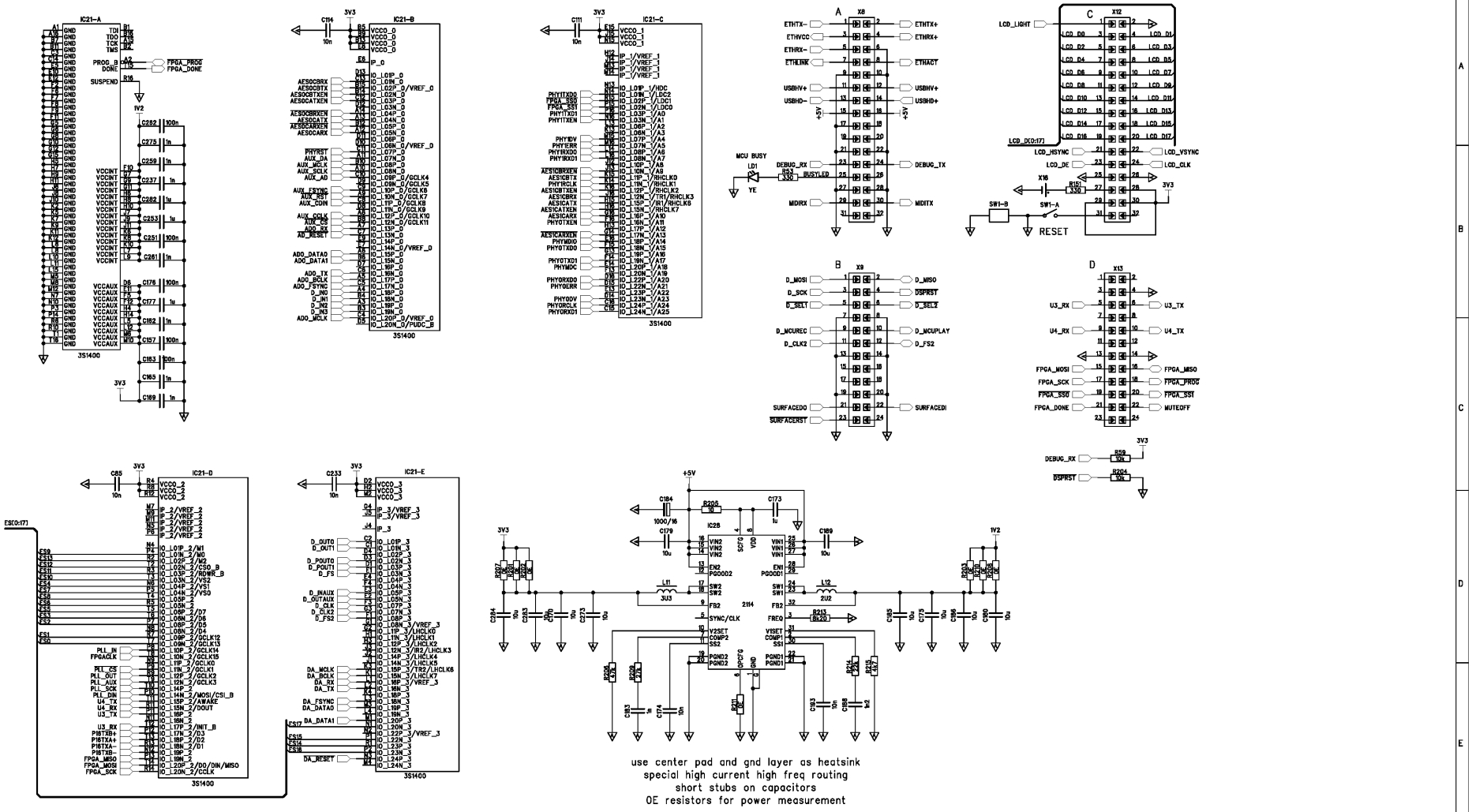

ALL INFORMATION (INCLUDING DRAWINGS AND DIAGRAMS) CONTAINED IN THIS DOCUMENT IS THE PROPERTY OF MUSIC GROUP. ADDRESSEES WHOM THE INFORMATION IS CONFIDED TO SHALL MAINTAIN THE INFORMATION IN CONFIDENCE AND SHALL NOT RELEASE IT TO ANY UNAUTHORIZED THIRD PARTIES (EXCEPT UNDER ATTORNEY CLIENT PRIVILEGE OR UNDER APPROPRIATE CONFIDENTIALITY AGREEMENTS). ANY UNAUTHORIZED DISCLOSURE, USE, APPLICATION OR ANY OTHER DEALINGS IN THE INFORMATION SHALL RESULT IN CIVIL AND/OR CRIMINAL LIABILITIES AND PENALTIES.

REV	CHANGES	DATE	INIT

	DATE	NAME
DRWN	2014-05-21	BLITGEN.A
CHKD		
APPR		

POBI9
05-MAIN
MCUFPGA

MUSIC GROUP

MADIS

SHEET 4 of 6

FILE : MCUFPGA

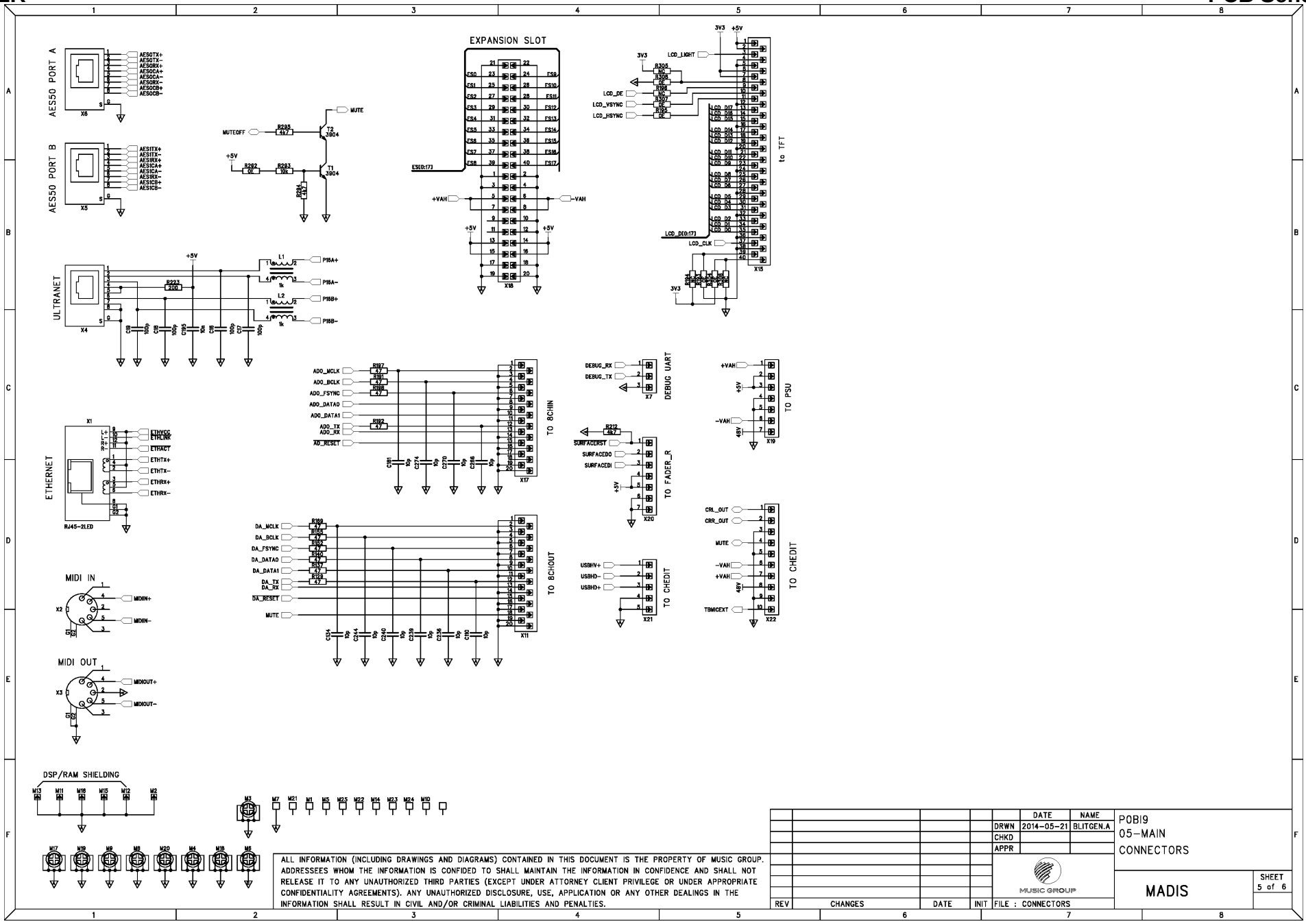
AES50 PORT A
AES50 PORT B
ULTRANET
ETHERNET
RJ45-2LED
MIDI IN
MIDI OUT
EXPANSION SLOT
DEBUG UART
TO FADER_R
TO CHEDIT
TO PSU
TO 8CHIN
TO 8CHOUT
to TFT
DSP/RAM SHIELDING
ALL INFORMATION (INCLUDING DRAWINGS AND DIAGRAMS) CONTAINED IN THIS DOCUMENT IS THE PROPERTY OF MUSIC GROUP. ADDRESSEES WHOM THE INFORMATION IS CONFIDED TO SHALL MAINTAIN THE INFORMATION IN CONFIDENCE AND SHALL NOT RELEASE IT TO ANY UNAUTHORIZED THIRD PARTIES (EXCEPT UNDER ATTORNEY CLIENT PRIVILEGE OR UNDER APPROPRIATE CONFIDENTIALITY AGREEMENTS). ANY UNAUTHORIZED DISCLOSURE, USE, APPLICATION OR ANY OTHER DEALINGS IN THE INFORMATION SHALL RESULT IN CIVIL AND/OR CRIMINAL LIABILITIES AND PENALTIES.
REV CHANGES DATE INIT
DRWN 2014-05-21 BLITGEN.A
CHKD
APPR
FILE : CONNECTORS
POBI9
05-MAIN
CONNECTORS
MADIS
SHEET 5 of 6

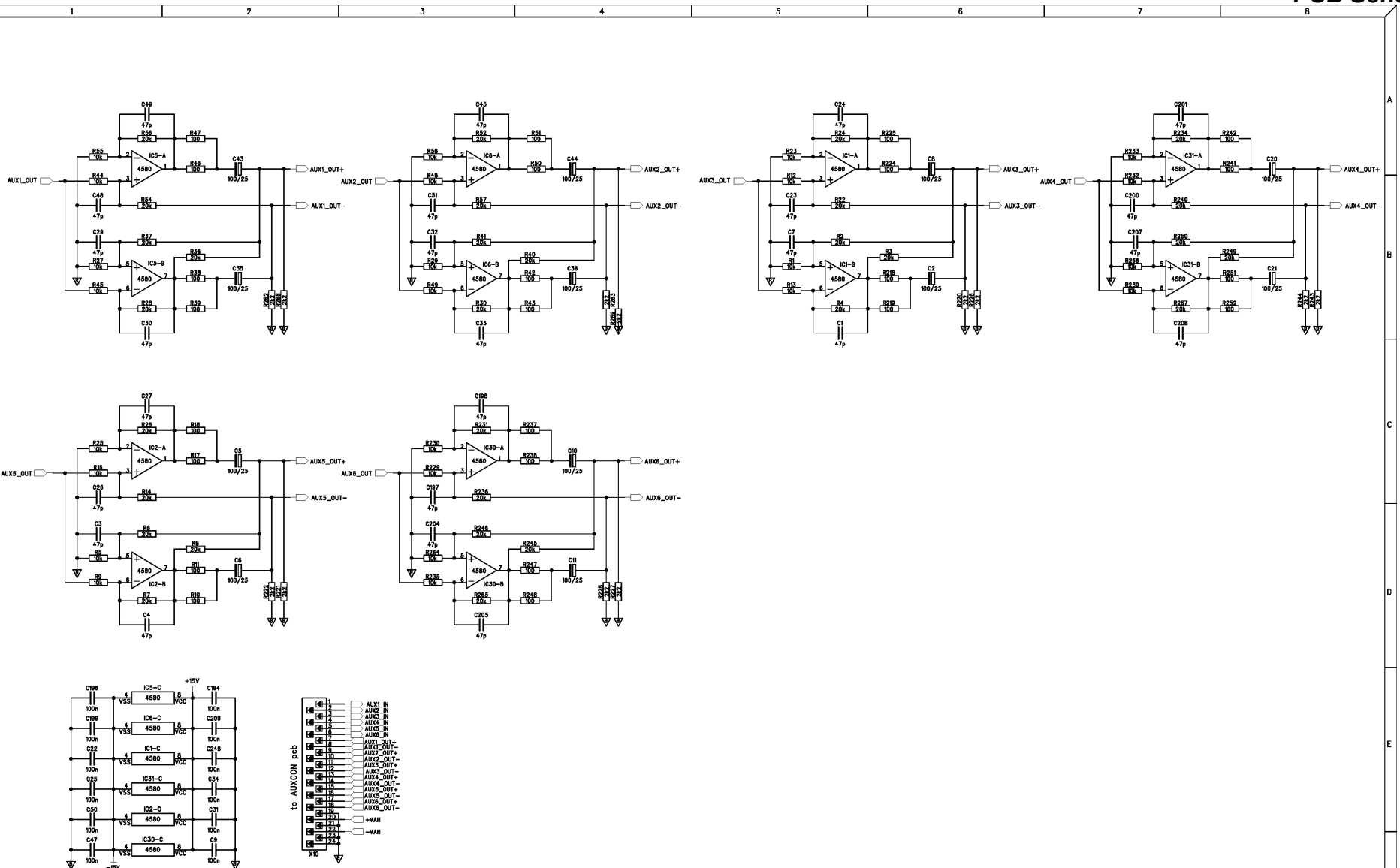

ALL INFORMATION (INCLUDING DRAWINGS AND DIAGRAMS) CONTAINED IN THIS DOCUMENT IS THE PROPERTY OF MUSIC GROUP. ADDRESSEES WHOM THE INFORMATION IS CONFIDED TO SHALL MAINTAIN THE INFORMATION IN CONFIDENCE AND SHALL NOT RELEASE IT TO ANY UNAUTHORIZED THIRD PARTIES (EXCEPT UNDER ATTORNEY CLIENT PRIVILEGE OR UNDER APPROPRIATE CONFIDENTIALITY AGREEMENTS). ANY UNAUTHORIZED DISCLOSURE, USE, APPLICATION OR ANY OTHER DEALINGS IN THE INFORMATION SHALL RESULT IN CIVIL AND/OR CRIMINAL LIABILITIES AND PENALTIES.

REV	CHANGES	DATE	INIT

	DATE	NAME
DRWN	2014-05-21	BLITGEN.A
CHKD		
APPR		

POBI9
05-MAIN
AUX OUTPUTS

MUSIC GROUP

MIDAS

SHEET 6 of 6

FILE : AUXOUT

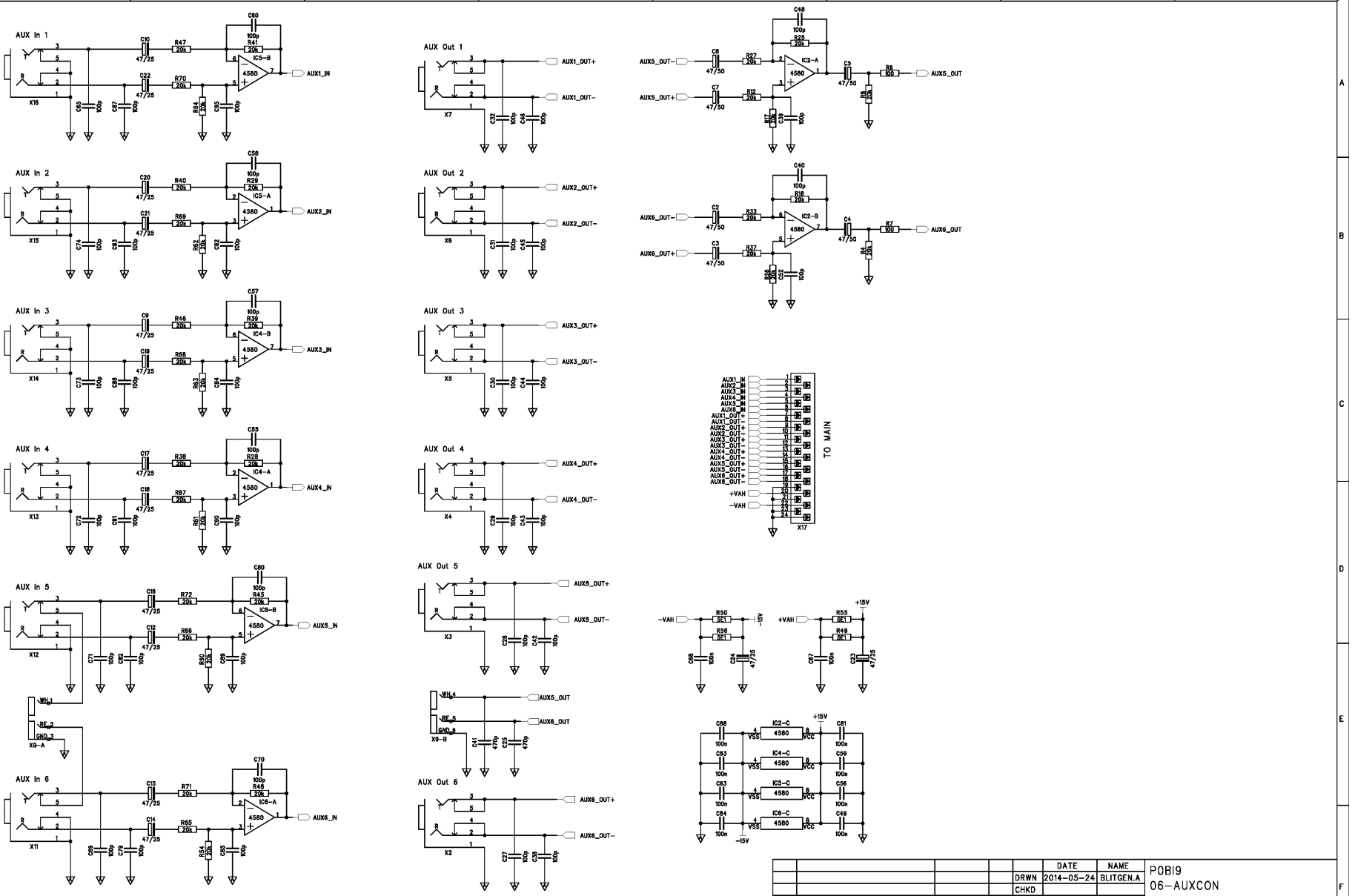

ALL INFORMATION (INCLUDING DRAWINGS AND DIAGRAMS) CONTAINED IN THIS DOCUMENT IS THE PROPERTY OF MUSIC GROUP. ADDRESSEES WHOM THE INFORMATION IS CONFIDED TO SHALL MAINTAIN THE INFORMATION IN CONFIDENCE AND SHALL NOT RELEASE IT TO ANY UNAUTHORIZED THIRD PARTIES (EXCEPT UNDER ATTORNEY CLIENT PRIVILEGE OR UNDER APPROPRIATE CONFIDENTIALITY AGREEMENTS). ANY UNAUTHORIZED DISCLOSURE, USE, APPLICATION OR ANY OTHER DEALINGS IN THE INFORMATION SHALL RESULT IN CIVIL AND/OR CRIMINAL LIABILITIES AND PENALTIES.

REV	CHANGES	DATE	INIT
B	UPDATED BASED ON LOM	2014-07-26	CYS
A	CREATED	2014-05-28	AB

	DATE	NAME
DRWN	2014-05-24	BLITGEN.A
CHKD		
APPR		

POB19
06-AUXCON
AUX

FILE : AUX

MUSIC GROUP

MIDAS

SHEET 1 of 2

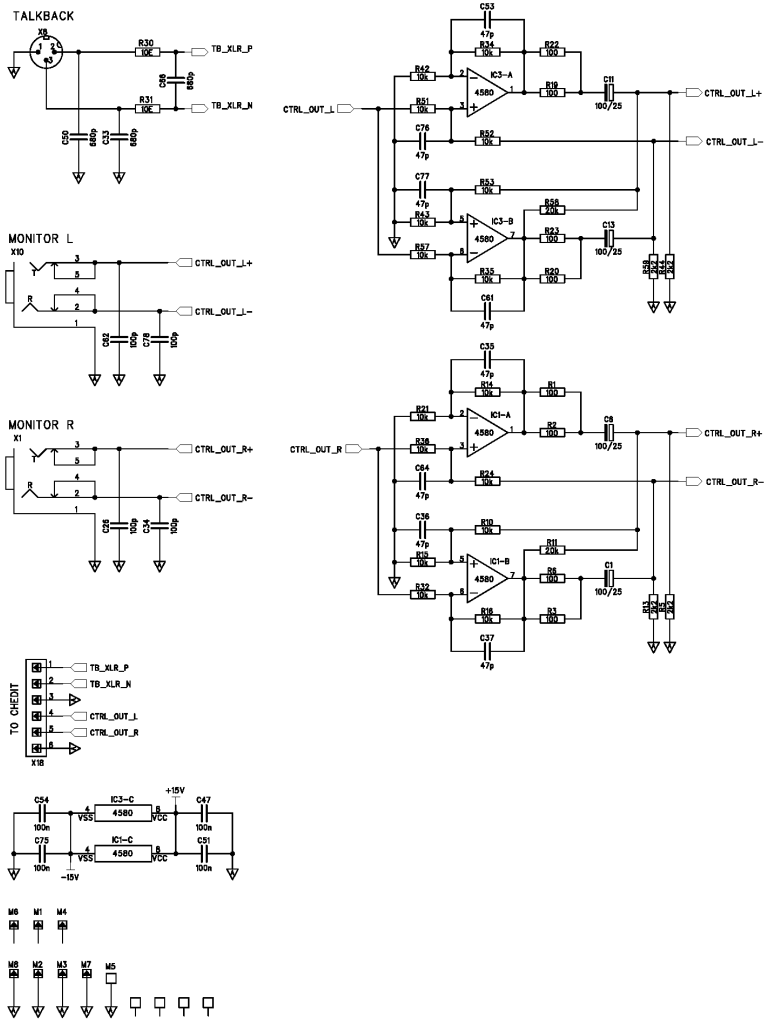

ALL INFORMATION (INCLUDING DRAWINGS AND DIAGRAMS) CONTAINED IN THIS DOCUMENT IS THE PROPERTY OF MUSIC GROUP. ADDRESSEES WHOM THE INFORMATION IS CONFIDED TO SHALL MAINTAIN THE INFORMATION IN CONFIDENCE AND SHALL NOT RELEASE IT TO ANY UNAUTHORIZED THIRD PARTIES (EXCEPT UNDER ATTORNEY CLIENT PRIVILEGE OR UNDER APPROPRIATE CONFIDENTIALITY AGREEMENTS). ANY UNAUTHORIZED DISCLOSURE, USE, APPLICATION OR ANY OTHER DEALINGS IN THE INFORMATION SHALL RESULT IN CIVIL AND/OR CRIMINAL LIABILITIES AND PENALTIES.

REV	CHANGES	DATE	INIT

	DATE	NAME
DRWN	2014-05-24	BLITGEN.A
CHKD		
APPR		

FILE : TB&CTRL-OUT

MUSIC GROUP

POBI9
06-AUXCON
TALKBACK AND CTRL OUT

MIDAS

SHEET 2 of 2

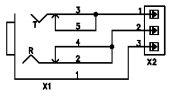

ALL INFORMATION (INCLUDING DRAWINGS AND DIAGRAMS) CONTAINED IN THIS DOCUMENT IS THE PROPERTY OF MUSIC GROUP. ADDRESSEES WHOM THE INFORMATION IS CONFIDED TO SHALL MAINTAIN THE INFORMATION IN CONFIDENCE AND SHALL NOT RELEASE IT TO ANY UNAUTHORIZED THIRD PARTIES (EXCEPT UNDER ATTORNEY CLIENT PRIVILEGE OR UNDER APPROPRIATE CONFIDENTIALITY AGREEMENTS). ANY UNAUTHORIZED DISCLOSURE, USE, APPLICATION OR ANY OTHER DEALINGS IN THE INFORMATION SHALL RESULT IN CIVIL AND/OR CRIMINAL LIABILITIES AND PENALTIES.

REV	CHANGES	DATE	INIT
A	CREATED	2014-07-27	CYS

	DATE	NAME
DRWN	2012-12-06	Rock.QIN
CHKD		
APPR		

MUSIC GROUP

FILE : PHONEJACK

P0B19
PHONEJACK

MADIS

SHEET 1 of 1

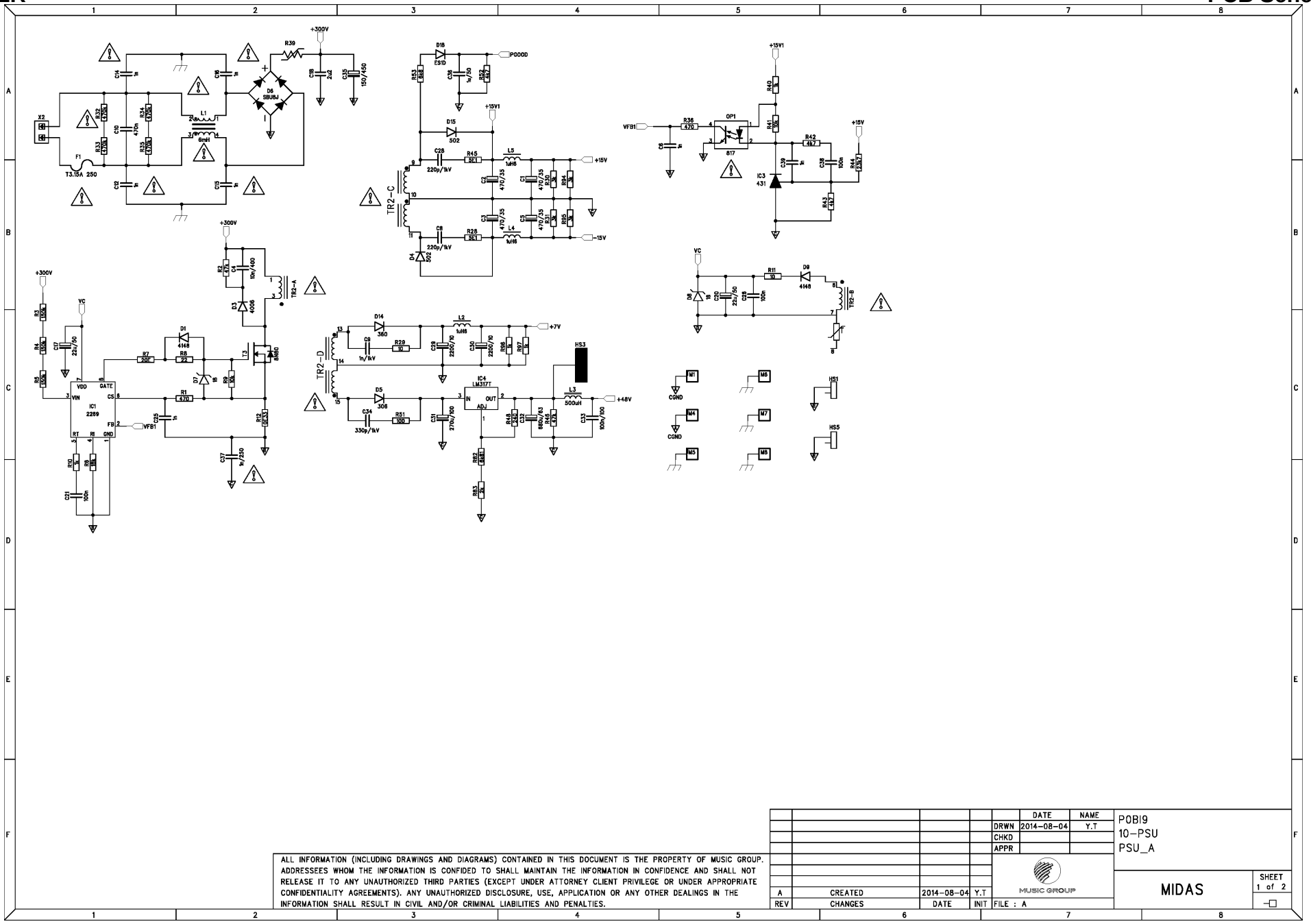

ALL INFORMATION (INCLUDING DRAWINGS AND DIAGRAMS) CONTAINED IN THIS DOCUMENT IS THE PROPERTY OF MUSIC GROUP. ADDRESSEES WHOM THE INFORMATION IS CONFIDED TO SHALL MAINTAIN THE INFORMATION IN CONFIDENCE AND SHALL NOT RELEASE IT TO ANY UNAUTHORIZED THIRD PARTIES (EXCEPT UNDER ATTORNEY CLIENT PRIVILEGE OR UNDER APPROPRIATE CONFIDENTIALITY AGREEMENTS). ANY UNAUTHORIZED DISCLOSURE, USE, APPLICATION OR ANY OTHER DEALINGS IN THE INFORMATION SHALL RESULT IN CIVIL AND/OR CRIMINAL LIABILITIES AND PENALTIES.

REV	CHANGES	DATE	INIT
A	CREATED	2014-08-04	Y.T

	DATE	NAME
DRWN	2014-08-04	Y.T
CHKD		
APPR		

FILE : A

MUSIC GROUP

POB19
10-PSU
PSU_A

MIDAS

SHEET 1 of 2

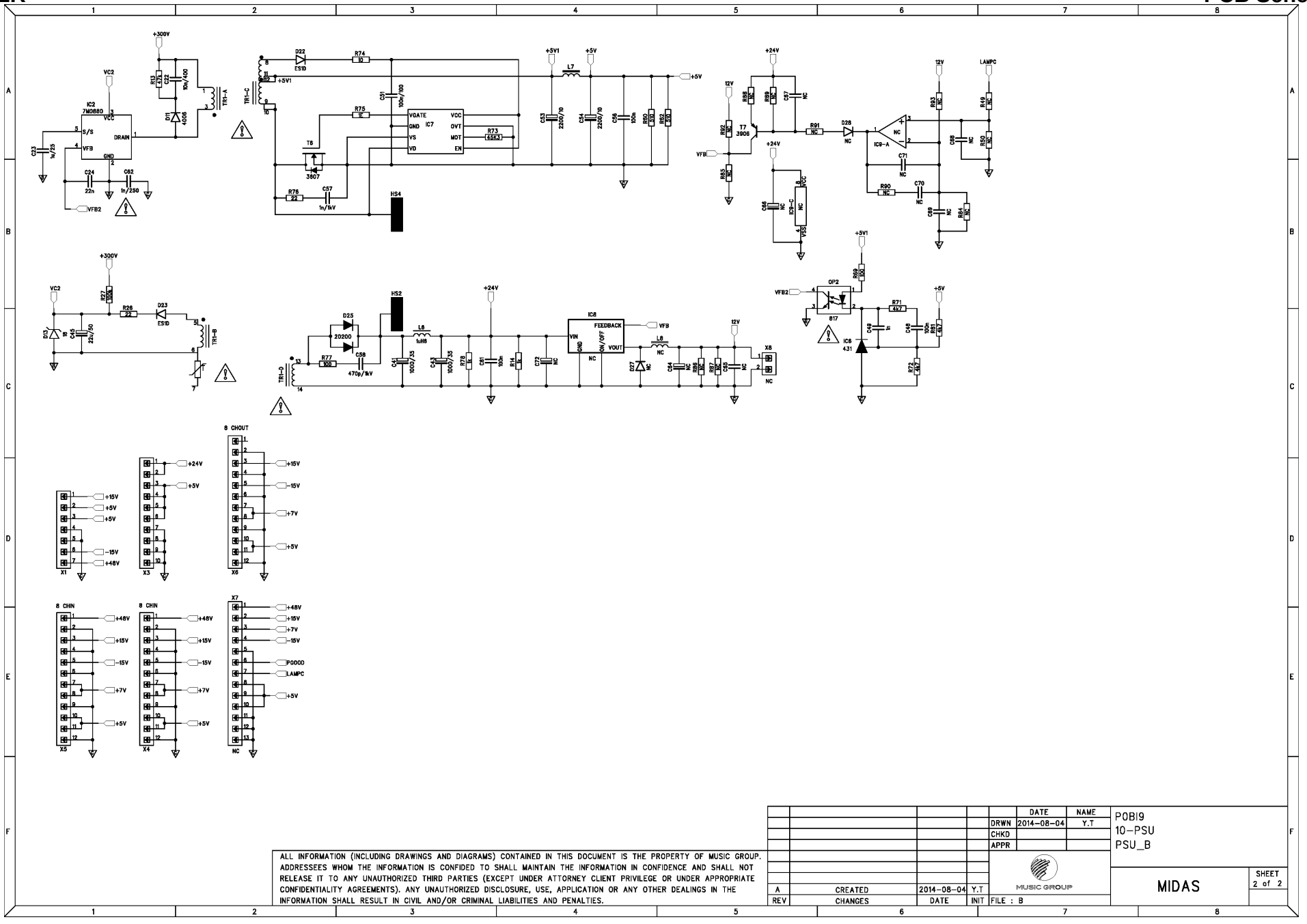

ALL INFORMATION (INCLUDING DRAWINGS AND DIAGRAMS) CONTAINED IN THIS DOCUMENT IS THE PROPERTY OF MUSIC GROUP. ADDRESSEES WHOM THE INFORMATION IS CONFIDED TO SHALL MAINTAIN THE INFORMATION IN CONFIDENCE AND SHALL NOT RELEASE IT TO ANY UNAUTHORIZED THIRD PARTIES (EXCEPT UNDER ATTORNEY CLIENT PRIVILEGE OR UNDER APPROPRIATE CONFIDENTIALITY AGREEMENTS). ANY UNAUTHORIZED DISCLOSURE, USE, APPLICATION OR ANY OTHER DEALINGS IN THE INFORMATION SHALL RESULT IN CIVIL AND/OR CRIMINAL LIABILITIES AND PENALTIES.

REV	CHANGES	DATE	INIT
A	CREATED	2014-08-04	Y.T

	DATE	NAME
DRWN	2014-08-04	Y.T
CHKD		
APPR		

MUSIC GROUP

FILE : B

POBI9
10-PSU
PSU_B

MIDAS

SHEET 2 of 2

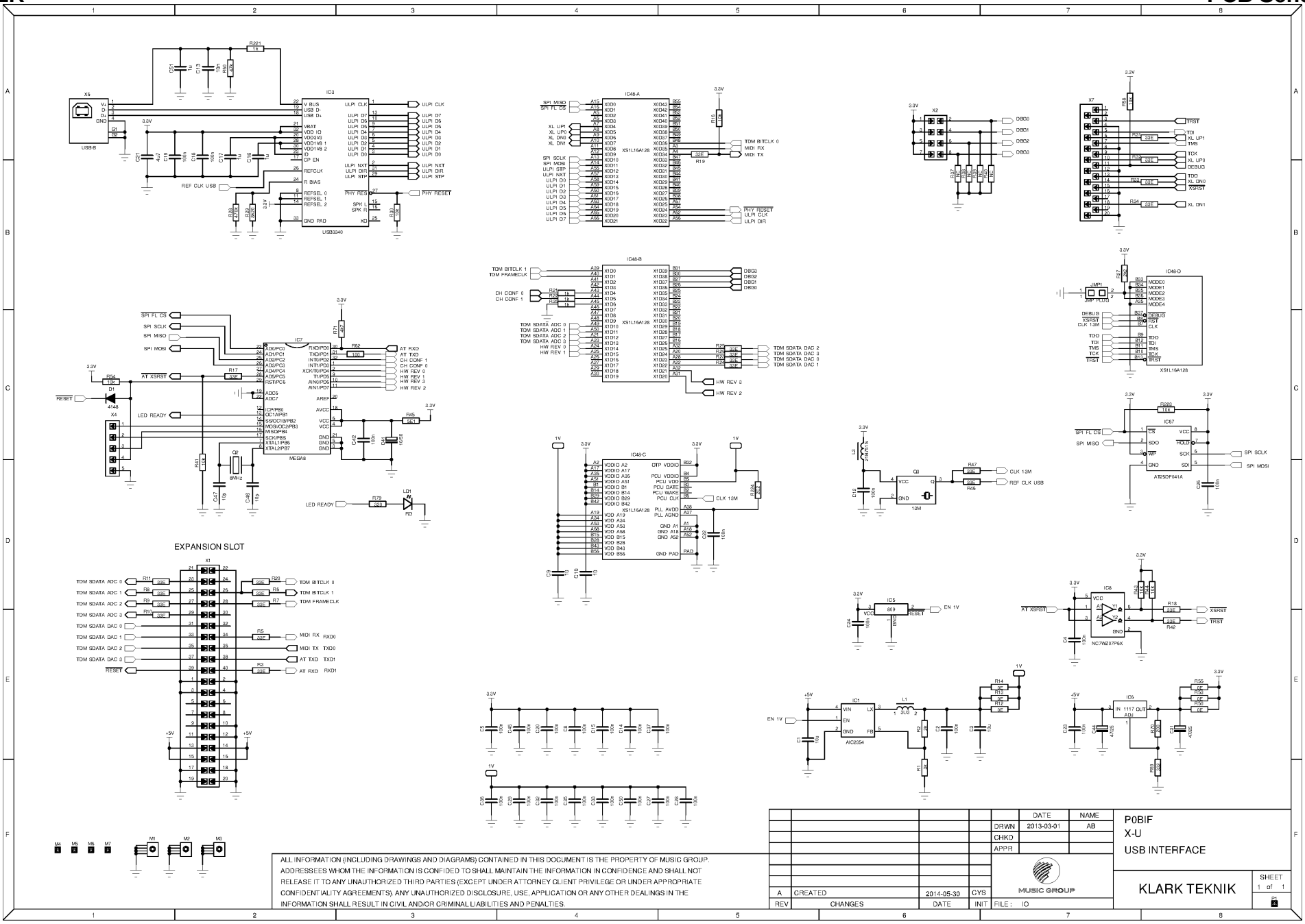
EXPANSION SLOT
ALL INFORMATION (INCLUDING DRAWINGS AND DIAGRAMS) CONTAINED IN THIS DOCUMENT IS THE PROPERTY OF MUSIC GROUP. ADDRESSEES WHOM THE INFORMATION IS CONFIDED TO SHALL MAINTAIN THE INFORMATION IN CONFIDENCE AND SHALL NOT RELEASE IT TO ANY UNAUTHORIZED THIRD PARTIES (EXCEPT UNDER ATTORNEY CLIENT PRIVILEGE OR UNDER APPROPRIATE CONFIDENTIALITY AGREEMENTS). ANY UNAUTHORIZED DISCLOSURE, USE, APPLICATION OR ANY OTHER DEALINGS IN THE INFORMATION SHALL RESULT IN CIVIL AND/OR CRIMINAL LIABILITIES AND PENALTIES.
DATE
NAME
DRWN
2013-03-01
AB
CHKD
APPR
P0BIF
X-U
USB INTERFACE
A
CREATED
2014-05-30
CYS
REV
CHANGES
DATE
INIT
FILE : IO
MUSIC GROUP
KLARK TEKNIK
SHEET
1 of 1

Service Assemblies

	Quantity	Unit	S.Sku	M.Sku	Description	Reference Designators	Notes
1			Q03-B3I00-00000	A09-B3I00-AV000	SPARE PART;P0B3I;SUB UNIT;FADER	[EXTRA SPARE]	
2			Q09-AHW00-00002	A09-AHW00-00002	SPARE PART;P0AHW;PCB ASSEMBLY;B;HI	[EXTRA SPARE]	
3			Q09-BI900-00000	A09-BI900-00000	SPARE PART;P0BI9;SCRNCTRL;SUB ASSEMBLY;SCRNCTRL	[EXTRA SPARE]	
4			Q09-BI900-00001	A09-BI900-00001	SPARE PART;P0BI9;PCB ASSEMBLY;2;A;HI;CHEDIT	[EXTRA SPARE]	
5			Q05-BI909-07103	A09-BI900-A1003	SPARE PART;P0BI9;REV:C;BASE;PCB ASSEMBLY;PCB:9;HI;WITHOUT FPC20;8C	[EXTRA SPARE]	
6			Q05-BI901-00101	A09-BI900-AW001	SPARE PART;P0BI9;REV:A;AES;PCB ASSEMBLY;PCB:1;HI;8CHIN	[EXTRA SPARE]	
7			Q05-BI905-00102	A09-BI900-07002	SPARE PART;P0BI9;REV:B;MAIN;PCB ASSEMBLY;PCB:5;HI	[EXTRA SPARE]	
8			Q05-BI907-00101	A09-BI900-14001	SPARE PART;P0BI9;REV:A;PEDAL;PCB ASSEMBLY;7;HI;PHONE_JACK	[EXTRA SPARE]	
9			Q04-BI900-02000	A09-BI900-AV000	SPARE PART;P0BI9;SUB ASSEMBLY;FADER_R	[EXTRA SPARE]	
10			Q04-BI900-43000	A09-BI900-A0000	SPARE PART;P0BI9;SUB ASSEMBLY;CHEDIT	[EXTRA SPARE]	
11			Q05-BI906-00102	A09-BI900-AX002	SPARE PART;P0BI9;REV:B;AUX;PCB ASSEMBLY;PCB:6;HI;AUXCON	[EXTRA SPARE]	
12			Q09-BIF00-00000	A09-BIF00-00000	SPARE PART;P0BIF;MAIN ASSEMBLY;DN32-USB	[EXTRA SPARE]	
13			Q05-BI908-00102	A09-BI900-AM002	SPARE PART;P0BI9;REV:B;SWITCH;PCB ASSEMBLY;PCB:8;HI;SCRNCTRL	[EXTRA SPARE]	
14			Q05-BI910-00101	A09-BI900-17001	SPARE PART;P0BI9;REV:A;PSU;PCB ASSEMBLY;PCB:10;HI	[EXTRA SPARE]	
15			Q09-BI900-53001	A09-BI900-53001	SPARE PART;P0BI9;PCB ASSEMBLY;4;A;HI;FADER_R	[EXTRA SPARE]	
16			Q04-BI900-03000	A09-BI900-54000	SPARE PART;P0BI9;SUB ASSEMBLY;FADER_L	[EXTRA SPARE]	
17			Q09-BI900-54001	A09-BI900-54001	SPARE PART;P0BI9;PCB ASSEMBLY;3;A;HI;FAEDR_L	[EXTRA SPARE]	
18			Q05-BI901-19101	A09-BI900-97001	SPARE PART;P0BI9;REV:A;AMP;PCB ASSEMBLY;PCB:1;HI;WIYHOUT FPC20;8C	[EXTRA SPARE]	

Hi Pcb Assemblies

	Quantity	Unit	S.Sku	M.Sku	Description	Reference Designators	Notes
1	1.0000	PC	Q05-B3I02-77101	A05-B3I02-77101	PCB ASSEMBLY;P0B3I;PCB:2;REV:A;HI;POWER DISTRIBUTION;SMPSU37;EMI		
2	1.0000	PC	Q05-B3I16-00108	A05-B3I16-00108	PCB ASSEMBLY;P0B3I;PCB:16;REV:H;HI;MCU		
3	1.0000	PC	Q05-BIF00-00101	A05-BIF00-00101	PCB ASSEMBLY;P0BIF;DN32-USB;REV:A;HI		

Cable

	Quantity	Unit	S.Sku	M.Sku	Description	Reference Designators	Notes
1	17.0000	PC	Q81-00000-64487	A81-00000-64487	WIRE HARNESS;AWG:24;UL1061;2.54 MM;6;320 MM;TA2510H-06;S/T:2.5mm		
2	2.0000	PC	Q81-00000-66506	A81-00000-66506	WIRE HARNESS;AWG:26;UL2468;2 MM;4;COMMON;60 MM;P1018-4P;A2006H-4P	[P0BI9:3: {1.0}(X18)]	
3	1.0000	PC	Q81-00000-66508	A81-00000-66508	WIRE HARNESS;AWG:26;UL2468;2 MM;8;COMMON;60 MM;A2006H-8P;P1018-8P	[P0BI9:3: {1.0}(X19)]	
4	1.0000	PC	Q81-00000-66512	A81-00000-66512	WIRE HARNESS;AWG:26;UL2468;2 MM;12;COMMON;500 MM;A2006H-12P;P1018-12P	[P0BI9:9: {1.0}(X1)]	
5	1.0000	PC	Q81-00000-66517	A81-00000-66517	WIRE HARNESS;AWG:26;UL2468;2 MM;6;COMMON;60 MM;A2006H-6P;P1018-6P	[P0BI9:2: {1.0}(X3)]	
6	1.0000	PC	Q81-00000-66530	A81-00000-66530	WIRE HARNESS;AWG:26;UL2468;2 MM;13;COMMON;150 MM;A2006H-13P;P1018-13P	[P0BI9:8: {1.0}(X1)]	
7	1.0000	PC	Q81-00000-71693	A81-00000-71693	WIRE HARNESS;650 MM;AWG:26;UL2468;2 MM;7;P1018-4P;A2006H-7P NO PIN4;PIN5 & PIN7	[P0BI9:4: {1.0}(X22)]	
8	1.0000	PC	Q81-00000-72547	A81-00000-72547	WIRE HARNESS;100 MM;AWG:18;UL1007;3.96 MM;7;PIN1 RED;JS1121-7P;JS4008-7P	[P0BI9:5: {1.0}(X19)]	
9	2.0000	PC	Q81-00000-75012	A81-00000-75012	WIRE HARNESS;150 MM;AWG:26;UL2468;2 MM;12;A2006H-12P;P1018-12P	[P0BI9:1: {1.0}(X1)]	
10	1.0000	PC	Q81-00000-75013	A81-00000-75013	WIRE HARNESS;2 00 MM;AWG:26;UL2547;2 MM;6;PIN1 RED;PIN3 and PIN6 SHIELD;P1018-6P;A2006H-6P	[P0BI9:2: {1.0}(X5)]	
11	1.0000	PC	Q81-00000-75015	A81-00000-75015	WIRE HARNESS;850 MM;AWG:26;UL2547;2 MM;5;PIN1 RED;A2006H-5P;P1018-5P; PIN5 SHIELD	[P0BI9:2: {1.0}(X9)]	
12	1.0000	PC	Q81-00000-75022	A81-00000-75022	WIRE HARNESS;550 MM;AWG:26;UL2468;2 MM;10;A2006H-10P;P1018-10P	[P0BI9:4: {1.0}(X23)]	
13	1.0000	PC	Q81-00001-07340	A81-00001-07340	WIRE HARNESS;AWG:26;UL2547;2 MM;3;800 MM;PIN1 RED;A2006H;P1018;SHIELD PIN3	[P0BI9:07: {1.0}(X2)]	
14	1.0000	PC	Q83-00001-07331	A83-00001-07331	SHIELDED CABLE;LENGTH:350 MM;AWG:26;UL2547;PITCH:2 MM;POLES:10;PIN3 AND PIN9 IS SHIELD;UL2468;P1018;A2006H	[P0BI9:2: {1.0}(X7)]	
15	2.0000	PC	Q85-00000-39129	A85-00000-39129	WIRE HARNESS;1 MM;20;140 MM;FLEX FLAT CABLE		
16	1.0000	PC	Q85-00000-39131	A85-00000-39131	WIRE HARNESS;1 MM;20;100 MM;FLEX FLAT CABLE		
17	1.0000	PC	Q85-00000-72055	A85-00000-72055	WIRE HARNESS;400 MM;0.5 MM;40;FLEX FLAT CABLE		
18	1.0000	PC	Q85-00000-78487	A85-00000-78487	WIRE HARNESS;380 MM;1 MM;24;The isolated tape outside;conductive cloth inside		
19	1.0000	PC	Q87-00001-02427	A87-00001-02427	CABLE ASSEMBLY;STRAND WIRE;LENGTH:150 MM;AWG:18;UL1672;PITCH:3.96 MM;POLES:3;NO PIN2;JS1121-3P;JS4008-3P;ADD SHRINKAGE TUBE	[P0B3I:2: {1.0}(X2)]	
20	1.0000	PC	Q87-00001-02428	A87-00001-02428	CABLE ASSEMBLY;STRAND WIRE;LENGTH:80 MM;AWG:18;UL1672;PITCH:3.96 MM;POLES:3;BROWN;JS1121-03,S/T:7MM;NO PIN2		
21	1.0000	PC	Q87-00001-07333	A87-00001-07333	CABLE ASSEMBLY;STRAND WIRE;LENGTH:50 MM;AWG:18;UL1672;BROWN;BOTH SIDES S/T:7MM		
22	1.0000	PC	Q76-18050-47490	A76-18050-06505	CABLE;AC-CORD;LENGTH:180cm;VERSION:SAA;PLUG:HE105 ISOLATED;SAA H05VV-F 3x0.75mm2;CONN.HP-3;PANYU		(SAA)
23	1.0000	PC	Q76-15222-06417	A76-15222-06417	CABLE;AC-CORD;W/POLYBAG;LENGTH:152cm;AWG:18;VERSION;UL;SPEC.NO:06417		(UL)
24	1.0000	PC	Q76-15212-03119	A76-15212-03119	CABLE;AC-CORD;W/POLYBAG;LENGTH:152cm;H05VV-F 3G 0.75MM2;VERSION;EU;SPEC.NO:03119		(EU)
25	1.0000	PC	Q76-00001-31031	A76-00001-31031	CABLE;AC-CORD;W/POLYBAG;LENGTH:150cm;AWG:18;H05VV-F 3G0.75MM;VERSION;UK;5A FUSE		(UK)
26	1.0000	PC	Q76-18050-47490	A76-18050-47490	CABLE;AC-CORD;LENGTH:180cm;VERSION:SAA;PLUG:HE105 ISOLATED;SAA H05VV-F 3x0.75mm2;CONN.HP-3;SPEC.NO:47490		(SAA)
27	1.0000	PC	Q76-00000-13573	A76-00000-13573	CABLE;AC-CORD;3;AR;1500 MM;Plug + Connector:321+730;H05VV-F 3G0.75		(AR)

	Quantity	Unit	S.Sku	M.Sku	Description	Reference Designators	Notes
28	1.0000	PC	Q76-15032-55649	A76-15032-55649	CABLE;AC-CORD;CLASS II;W/POLYBAG;JAPAN;LENGTH:150cm;POLES:3;APPROVAL:PSE;JS15S 3 + VCTF 3x0.75mm2 + V1528		(JP, JPMG)
29	1.0000	PC	Q76-00000-05305	A76-00000-05305	CABLE;AC-CORD;3;BR;1500 MM;Plug + Connector:375+730;H05VV-F 3G0.75		(BR)

Capacitor

	Quantity	Unit	S.Sku	M.Sku	Description	Reference Designators	Notes
1	6.0000	PC			CAP E;10uF;6V;PITCH:2mm5;5mm x 11mm;VERTICAL 12.7-15-9mm	[P0BI9:4: {3.0}(C2-C4)]	*NOT available in DP
2	2.0000	PC			CAP E;220uF;10V;PITCH:2mm5;6mm x 11mm;VERTICAL 12.7-15-9mm	[P0BI9:4: {1.0}(C1)]	*NOT available in DP
3	5.0000	PC			CAP E;100uF;16V;PITCH:2mm5;5mm x 11mm;VERTICAL 12.7-15-9mm	[P0BI9:5: {5.0}(C86,C112,C127,C140,C190)]	*NOT available in DP
4	2.0000	PC			CAP E;220uF;16V;PITCH:2mm5;6.3mm x 12mm;VERTICAL 12.7-15-9mm	[P0BI9:1: {1.0}(C29)]	*NOT available in DP
5	5.0000	PC			CAP E;220uF;16V;PITCH:2mm5;6mm3 x 12mm;VERTICAL 12.7-15-9mm	[P0BI9:4: {2.0}(C6-C7)]	*NOT available in DP
6	1.0000	PC			CAP E;1mF;16V;PITCH:5mm;10mm x 16mm;VERTICAL 12.7-15-9mm	[P0BI9:5: {1.0}(C184)]	*NOT available in DP
7	19.0000	PC			CAP E;47uF;25V;PITCH:2mm5;5mm x 11mm;UNCUT;VERTICAL 12.7-15-9mm	[P0BI9:5: {19.0}(C46,C53-C54,C62,C68,C72-C73,C75,C78,C81,C83,C128,C132,C138-C139,C141-C142,C146,C148)]	*NOT available in DP
8	41.0000	PC			CAP E;47uF;25V;PITCH:2mm5;5mm x 11mm;VERTICAL 12.7-15-9mm	[P0BIF:00: {2.0}(C31,C44)]	*NOT available in DP
9	92.0000	PC			CAP E;100uF;25V;PITCH:2mm5;6mm x 12mm;VERTICAL 12.7-15-9mm	[P0BI9:1: {18.0}(C54,C56,C58,C60,C62-C64,C66-C68,C70-C77)]	*NOT available in DP
10	2.0000	PC			CAP E;1uF;50V;PITCH:2mm5;5mm x 11mm;VERTICAL 12.7-15-9mm	[P0BI9:1: {1.0}(C2)]	*NOT available in DP
11	2.0000	PC			CAP E;4uF7;50V;PITCH:2mm5;5mm x 11mm;VERTICAL 12.7-15-9mm	[P0BI9:5: {2.0}(C82,C115)]	*NOT available in DP
12	33.0000	PC			CAP E;10uF;50V;PITCH:2mm5;5mm x 11mm;VERTICAL 12.7-15-9mm	[P0BIF:00: {1.0}(C41)]	*NOT available in DP
13	16.0000	PC			CAP E;47uF;63V;PITCH:2mm5;6mm x 11mm;VERTICAL 12.7-15-9mm	[P0BI9:1: {8.0}(C110-C117)]	*NOT available in DP
14	5.0000	PC			CAP E;1 mF;6V3;PITCH:5 MM;SIZE:8X11;L: 11+0.5MM;AI;VERTICAL 12.7-15-9mm;85C	[P0BI9:1: {2.0}(C49-C50)]	*NOT available in DP
15	2.0000	PC			CAP E;220 uF;35 V;20 %;RADIAL;SIZE:8X11.5;PITCH:3.5MM;PRE-CUT:3.2+-0.3	[P0BI9:4: {1.0}(C5)]	*NOT available in DP
16	32.0000	PC			CAP CER;220 pF;100 V;C0G;5 %;SMD805	[P0B3I:2: {32.0}(C166,C168,C170,C172,C174,C176,C178,C180-C197,C199,C201,C203,C205,C207,C209,C211)]	*NOT available in DP
17	32.0000	PC			CAP CER;1 nF;100 V;C0G;5 %;SMD805	[P0B3I:2: {32.0}(C114,C118,C122,C126,C131,C135,C139,C143,C145-C148,C150,C154,C158,C162,C213,C216-C217,C220-C221,C224-C225,C228-C229,C232-C233,C236-C237,C240-C241,C243)]	*NOT available in DP
18	16.0000	PC			CAP CER;15 nF;50 V;C0G;5 %;SMD805	[P0BI9:1: {8.0}(C1,C4-C5,C42,C48,C52-C53,C142)]	*NOT available in DP
19	32.0000	PC			CAP CER;47 nF;25 V;C0G;5 %;SMD805	[P0B3I:2: {32.0}(C93-C113,C116-C117,C120-C121,C124-C125,C128-C129,C133,C137,C141)]	*NOT available in DP
20	16.0000	PC			CAP CER;5.6 nF;50 V;C0G;5 %;SMD805	[P0B3I:2: {16.0}(C69,C71,C73,C75,C78,C80,C82,C84-C92)]	*NOT available in DP
21	2.0000	PC			CAP CER;1 nF;2 kV;X7R;10 %;SMD805;SMD1206	[P0BI9:5: {2.0}(C202-C203)]	*NOT available in DP
22	1.0000	PC			CAP CER;100nF;100V;20%;PITCH:5mm;DISC;VERTICAL 12.7-15-9mm	[P0BI9:10: {1.0}(C33)]	*NOT available in DP
23	2.0000	PC			CAP CER;220pF;1KV;Y5P;10%;PITCH:5mm;DISC;VERTICAL 12.7-15-9mm	[P0BI9:10: {2.0}(C8,C28)]	*NOT available in DP
24	8.0000	PC			CAP CER;1.5 nF;50 V;C0G;2 %;SMD805	[P0BI9:5: {8.0}(C88-C89,C152-C153,C221-C222,C246-C247)]	*NOT available in DP
25	1.0000	PC			CAP CER;4.7 uF;6.3 V;X5R;20 %;SMD603	[P0BIF:00: {1.0}(C21)]	*NOT available in DP
26	3.0000	PC			CAP CER;4uF7;6V3;X5R;10%;SMT805	[P0BI9:00: {3.0}(C4,C9-C10)]	*NOT available in DP
27	12.0000	PC			CAP CER;10 uF;6.3 V;X5R;10 %;SMD805;YAGEO (CC85KRX5R6BB106)	[P0BI9:5: {12.0}(C104,C125,C170,C175,C179-C180,C185-C186,C189,C273,C283-C284)]	*NOT available in DP
28	12.0000	PC			CAP CER;10uF;6V3;X5R;20%;SMT805	[P0BIF:00: {4.0}(C1,C3,C9-C10)]	*NOT available in DP
29	2.0000	PC			CAP CER;1uF;10V;+80% /-20%;SMT603	[P0B3I:16: {2.0}(C19,C27)]	*NOT available in DP
30	19.0000	PC			CAP CER;1uF;10V;X5R;10%;SMD603	[P0BIF:00: {3.0}(C16-C17,C51)]	*NOT available in DP
31	35.0000	PC			CAP CER;1uF;16V;X7R;10%;SMT805	[P0BI9:4: {18.0}(C30-C33,C35-C36,C38-C39,C41-C42,C44-C45,C47-C48,C50-C51,C53-C54)]	*NOT available in DP

	Quantity	Unit	S.Sku	M.Sku	Description	Reference Designators	Notes
32	52.0000	PC			CAP CER;100nF;10V;X5R;10%;SMT402;(MURATA GRM155R61A104KA01E)	[P0B3I:16: {52.0}(C1,C6-C12,C14-C16,C18,C20-C22,C28,C33,C35-C37,C39-C41,C45-C46,C50-C72,C75-C78)]	*NOT available in DP
33	1.0000	PC			CAP CER;10uF;16V;X5R;SMD1206	[P0BI9:00: {1.0}(C7)]	*NOT available in DP
34	6.0000	PC			CAP CER;10 nF;16 V;Y5V;+80%/-20 %;SMD402	[P0B3I:16: {6.0}(C2-C4,C13,C34,C38)]	*NOT available in DP
35	2.0000	PC			CAP CER;220pF;25V;C0G;10%;SMT805	[P0BI9:4: {1.0}(C83)]	*NOT available in DP
36	75.0000	PC			CAP CER;100nF;25V;X7R;10%;SMT805	[P0BIF:00: {2.0}(C23,C42)]	*NOT available in DP
37	4.0000	PC			CAP CER;470nF;25V;X7R;10%;SMT805	[P0BI9:00: {4.0}(C2,C6,C8,C13)]	*NOT available in DP
38	1.0000	PC			CAP CER;1uF;25V;X7R;10%;SMT1206	[P0BI9:10: {1.0}(C23)]	*NOT available in DP
39	46.0000	PC			CAP CER;10pF;50V;10%;SMT603	[P0BIF:00: {2.0}(C46-C47)]	*NOT available in DP
40	2.0000	PC			CAP CER;20pF;50V;20%;SMT603	[P0B3I:16: {2.0}(C29-C30)]	*NOT available in DP
41	48.0000	PC			CAP CER;22pF;50V;10%;SMT603	[P0BI9:1: {24.0}(C160,C162,C164,C166,C184-C191,C220-C227,C246,C251,C256,C261)]	*NOT available in DP
42	31.0000	PC			CAP CER;47pF;50V;5%;COG(NPO);SMT603	[P0BI9:5: {12.0}(C69,C71,C93-C94,C97,C99-C100,C102,C119,C121-C122,C124)]	*NOT available in DP
43	86.0000	PC			CAP CER;100pF;50V;20%;SMT603	[P0BI9:1: {16.0}(C288-C303)]	*NOT available in DP
44	64.0000	PC			CAP CER;330pF;50V;C0G;5%;SMD603	[P0BI9:1: {32.0}(C245,C248,C250,C253,C255,C258,C260,C263-C287)]	*NOT available in DP
45	5.0000	PC			CAP CER;470pF;50V;10%;SMT603	[P0B3I:16: {1.0}(C23)]	*NOT available in DP
46	3.0000	PC			CAP CER;680pF;50V;C0G;5%;SMD603	[P0BI9:6: {3.0}(C33,C50,C66)]	*NOT available in DP
47	27.0000	PC			CAP CER;1nF;50V;10%;SMT603	[P0BI9:5: {27.0}(C117,C147,C156,C162,C164-C165,C169,C183,C232,C237-C238,C241,C250,C259,C261,C263,C267-C269,C271,C275,C277,C279,C281,C286-C288)]	*NOT available in DP
48	1.0000	PC			CAP CER;1nF2;50V;10%;SMT603	[P0BI9:5: {1.0}(C188)]	*NOT available in DP
49	12.0000	PC			CAP CER;10nF;50V;10%;SMT603	[P0BI9:5: {12.0}(C85,C96,C105,C111,C114,C118,C135,C174,C193,C195,C228,C233)]	*NOT available in DP
50	1.0000	PC			CAP CER;10nF;50V;X7R;10%;SMT603	[P0BIF:00: {1.0}(C13)]	*NOT available in DP
51	125.0000	PC			CAP CER;100nF;50V;10%;SMT603	[P0BIF:00: {23.0}(C2,C4-C5,C8,C12,C14-C15,C18-C20,C22,C24,C26-C29,C32-C33,C35-C37,C45,C50)]	*NOT available in DP
52	6.0000	PC			CAP CER;22pF;50V;10%;SMT805	[P0BI9:4: {2.0}(C69-C70)]	*NOT available in DP
53	32.0000	PC			CAP CER;47pF;50V;C0G;5%;SMD805	[P0BI9:5: {24.0}(C1,C3-C4,C7,C23-C24,C26-C27,C29-C30,C32-C33,C45,C48-C49,C51,C197-C198,C200-C201,C204-C205,C207-C208)]	*NOT available in DP
54	34.0000	PC			CAP CER;100pF;50V;10%;SMT805	[P0BI9:1: {16.0}(C196,C199-C200,C203-C204,C207-C208,C211-C219)]	*NOT available in DP
55	8.0000	PC			CAP CER;100pF;50V;C0G;5%;SMT805	[P0BI9:5: {8.0}(C66-C67,C76-C77,C136-C137,C144-C145)]	*NOT available in DP
56	5.0000	PC			CAP CER;470pF;50V;C0G;5%;SMD805	[P0BI9:5: {3.0}(C65,C225-C226)]	*NOT available in DP
57	2.0000	PC			CAP CER;1nF;50V;10%;SMT805	[P0BI9:4: {1.0}(C85)]	*NOT available in DP
58	4.0000	PC			CAP CER;1nF;50V;X7R;10%;SMD805	[P0BI9:10: {4.0}(C6,C25,C39,C49)]	*NOT available in DP
59	79.0000	PC			CAP CER;1nF;50V;C0G;5%;SMD805	[P0BI9:1: {32.0}(C168-C183,C304,C306,C308,C310,C312,C314,C316,C318,C320-C327)]	*NOT available in DP
60	1.0000	PC			CAP CER;22nF;50V;X7R;10%;SMD805	[P0BI9:10: {1.0}(C24)]	*NOT available in DP
61	16.0000	PC			CAP CER;2nF2;50V;10%;SMT805	[P0BI9:1: {8.0}(C305,C307,C309,C311,C313,C315,C317,C319)]	*NOT available in DP
62	10.0000	PC			CAP CER;10nF;50V;10%;SMT805	[P0BI9:4: {1.0}(C88)]	*NOT available in DP
63	317.0000	PC			CAP CER;100nF;50V;X7R;10%;SMT805	[P0BI9:1: {57.0}(C11,C15,C19,C22,C25,C31,C38,C43,C143-C151,C161,C163,C165,C167,C192-C195,C197-C198,C201-C202,C205-C206,C209-C210,C228-C244,C247,C249,C252,C254,C257,C259,C262)]	*NOT available in DP
64	18.0000	PC			CAP CER;220nF;50V;10%;SMT805	[P0BI9:4: {9.0}(C34,C37,C40,C43,C46,C49,C52,C55-C56)]	*NOT available in DP
65	1.0000	PC			CAP CER;470nF;50V;X7R;10%;SMD1206	[P0BI9:00: {1.0}(C3)]	*NOT available in DP

	Quantity	Unit	S.Sku	M.Sku	Description	Reference Designators	Notes
66	1.0000	PC			CAP CER;1uF;50V;X7R;20%;SMT1206	[P0BI9:10: {1.0}(C36)]	*NOT available in DP
67	4.0000	PC			CAP CER;15pF;50V;C0G;5%;SMD402;YAGEO	[P0B3I:16: {4.0}(C25-C26,C73-C74)]	*NOT available in DP
68	1.0000	PC			CAP CER;100nF;100V;X7R;10%;SMD1206	[P0BI9:10: {1.0}(C51)]	*NOT available in DP
69	4.0000	PC			CAP Y2;1nF;250V;PITCH:7mm5	[P0BI9:10: {4.0}(C12,C14-C16)]	*NOT available in DP
70	2.0000	PC			CAP Y1;1nF;250V;20%;Y5U;PITCH:10mm;PRECUT:3.3	[P0BI9:10: {2.0}(C37,C62)]	*NOT available in DP
71	2.0000	PC			CAP Y2;2nF2;250V;PITCH:7mm5;DISC;CASE:4 x 10mm	[P0B3I:2: {2.0}(C1,C3)]	*NOT available in DP
72	2.0000	PC	R12-32470-06719	B12-32470-06719	CAP X2;470n;275V;P15;18*16.5*8.5;NOT PRECUT;	[P0B3I:2: {1.0}(C2)]	
73	1.0000	PC			CAP E;270 uF;100 V;20 %;RADIAL;13*30;5 MM;PRECUT:3.3mm	[P0BI9:10: {1.0}(C31)]	*NOT available in DP
74	16.0000	PC			CAP E;1.5 mF;6.3 V;20 %;RADIAL;10mmX12mm5;5 MM;105C	[P0BI9:1: {8.0}(C102-C109)]	*NOT available in DP
75	4.0000	PC			CAP E;2mF2;10V;PITCH:5mm;10mm x 20mm;105C;LOW ESR;105C;VERTICAL 12.7-15-9mm	[P0BI9:10: {4.0}(C29-C30,C53-C54)]	*NOT available in DP
76	4.0000	PC			CAP E;470 uF;35 V;20 %;RADIAL;10*20;5 MM;T&R	[P0BI9:10: {4.0}(C1-C3,C5)]	*NOT available in DP
77	2.0000	PC			CAP E;1 mF;35 V;20 %;RADIAL;13*25;5 MM;T&R	[P0BI9:10: {2.0}(C41,C43)]	*NOT available in DP
78	3.0000	PC			CAP E;22 uF;50 V;20 %;RADIAL;6.3*11;2.5 MM;T&R	[P0BI9:10: {3.0}(C17,C20,C45)]	*NOT available in DP
79	1.0000	PC			CAP E;680 uF;63 V;20 %;RADIAL;13*30;5 MM;PRECUT:3.2	[P0BI9:10: {1.0}(C32)]	*NOT available in DP
80	1.0000	PC			CAP CER;330pF;1KV;20%;PITCH:5mm;DISC;VERTICAL 12.7-15-9mm	[P0BI9:10: {1.0}(C34)]	*NOT available in DP
81	1.0000	PC			CAP CER;470pF;1KV;10%;PITCH:5mm;DISC;VERTICAL 12.7-15-9mm	[P0BI9:10: {1.0}(C58)]	*NOT available in DP
82	2.0000	PC			CAP CER;1nF;1KV;20%;PITCH:5mm;DISC;VERTICAL 12.7-15-9mm	[P0BI9:10: {2.0}(C9,C57)]	*NOT available in DP
83	16.0000	PC			CAP FILM;220 nF;63 V;MPF;5 %;BOX;PITCH:5 mm	[P0BI9:1: {8.0}(C86-C93)]	*NOT available in DP
84	1.0000	PC			CAP FILM;2.2 uF;450 V;MPF;5 %;17.5 x 20 x 12mm;PITCH:15 mm	[P0BI9:10: {1.0}(C18)]	*NOT available in DP
85	1.0000	PC			CAP E;47 uF;16 V;20 %;DXL:5X5MM5;SMD	[P0B3I:16: {1.0}(C31)]	*NOT available in DP
86	2.0000	PC			CAP FILM;10nF;400V;MPF;10%;PITCH:5mm;BOX;VERTICAL 12.7-15-9mm	[P0BI9:10: {2.0}(C4,C22)]	*NOT available in DP
87	1.0000	PC			CAP E;105C;150 uF;450 V;20 %;25*36;10 MM;SNAP IN;HP SERIES	[P0BI9:10: {1.0}(C35)]	*NOT available in DP
88	88.0000	PC			CAP E;47uF;50V;PITCH:2mm5;6mm x 11mm;LOW LEAKAGE;VERTICAL 12.7-15-9mm	[P0BI9:1: {36.0}(C78,C80,C82,C84,C94-C101,C118-C141)]	*NOT available in DP

Circuit Protector

	Quantity	Unit	S.Sku	M.Sku	Description	Reference Designators	Notes
1	1.0000	PC	R22-00000-24721	B22-00000-24721	FUSE;3.15 A;V;LOW;P5.08;SIZE:8.5*8*4	[P0BI9:10: {1.0}(F1)]	

Coil

	Quantity	Unit	S.Sku	M.Sku	Description	Reference Designators	Notes
1	1.0000	PC	R37-00000-25508	B37-00000-25508	COIL;CHOKE;500 uH;COIL 7;PS176 T10X5X5 L(S-F):500uH MIN@1KHZ,0.25V	[P0BI9:10: {1.0}(L3)]	
2	3.0000	PC	R37-00000-27563	B37-00000-27563	COIL;CHOKE;6 mH;ET24;L:6mH MIN@1KHZ,0.25V.SG	[P0B3I:2: {2.0}(L1-L2)]	
3	2.0000	PC	R37-00000-35431	B37-00000-35431	COIL;CHOKE;1000 OHMS;SMD;SMDWCM3216S-102-2P	[P0BI9:5: {2.0}(L1-L2)]	
4	1.0000	PC	R37-00000-51625	B37-00000-51625	COIL;CHOKE;0.58 uH;0.05 OHMS;6X15 MM;R6X15 L(S-F):0.58uH+/-30%@1KHZ,0.25V	[P0BI9:10: {1.0}(L7)]	
5	4.0000	PC	R37-01603-04435	B37-01603-04435	COIL;CHOKE;1uH6;UL TUBE:5 x 16m;WIRE DIA:2UEW0mm6;9.5TURNS	[P0BI9:10: {4.0}(L2,L4-L6)]	
6	7.0000	PC	R39-00000-03394	B39-00000-03394	COIL;SMD;BEAD;SMD0805;(BLM21BD751SN1D)	[P0BIF:00: {1.0}(L3)]	
7	2.0000	PC	R39-00000-17453	B39-00000-17453	COIL;SMD;1040;33 uH;20%;3A5;TAPE and Reel	[P0BI9:4: {1.0}(L1)]	
8	3.0000	PC	R39-00000-19577	B39-00000-19577	COIL;SMD;3.3 uH;3A;20%;SIZE:1040;TAPE and Reel	[P0BIF:00: {1.0}(L1)]	
9	1.0000	PC	R39-00000-19578	B39-00000-19578	COIL;SMD;1040;2.2 uH;4A MIN;20%;TAPE and REEL	[P0BI9:5: {1.0}(L12)]	
10	1.0000	PC	R39-00000-70447	B39-00000-70447	COIL;10uH;20%;SMD;DEM3518C;3MM5X3MM7X1MM8;900mA MIN	[P0BI9:00: {1.0}(L2)]	
11	1.0000	PC	R39-00000-70448	B39-00000-70448	COIL;22uH;20%;SMD;DEM3518C;3MM5X3MM7X1MM8;800mA MIN	[P0BI9:00: {1.0}(L1)]	
12	4.0000	PC	R39-21202-00018	B39-21202-00018	COIL;SMD BEAD;SMD1608;(MURATA BLM18BB121))	[P0BI9:5: {4.0}(L3-L6)]	
13	10.0000	PC	R39-21202-00651	B39-21202-00651	COIL;SMD BEAD;SMD603;(MURATA BLM18AG601SN1))	[P0B3I:16: {10.0}(L1-L2,L4-L11)]	
14	32.0000	PC	R39-26000-21049	B39-26000-21049	COIL;SMD;BEAD;(BLM21AG601S)	[P0BI9:1: {16.0}(L1-L16)]	

Computer

	Quantity	Unit	S.Sku	M.Sku	Description	Reference Designators	Notes
1	1.0000	PC	R51-00000-59331	B51-00000-59331	MEMORY CARD;P0AAQ;128MB industrial grade SLC microSD		

Connector

	Quantity	Unit	S.Sku	M.Sku	Description	Reference Designators	Notes
1	1.0000	PC	R83-00000-11200	B83-00000-11200	USB CONNECTOR;4;VERTICAL;CHUNSHENG;USB-A-110BK-EP	[P0BI9:2: {1.0}(X1)]	
2	1.0000	PC	R83-00000-17677	B83-00000-17677	CONNECTOR;40;TX24-40R-LT-H1E	[P0BI9:5: {1.0}(X18)]	
3	1.0000	PC	R83-00000-17678	B83-00000-17678	CONNECTOR;40;TX25-40P-LT-H1E	[P0BIF:00: {1.0}(X1)]	
4	6.0000	PC	R83-00000-17806	B83-00000-17806	CONNECTOR;20;1 MM;SMD;FPC20 VERTICAL	[P0BI9:1: {2.0}(X3-X4)]	
5	1.0000	PC	R83-00000-17833	B83-00000-17833	CONNECTOR;24;1 MM;SMD;FPC24 VERTICAL	[P0BI9:5: {1.0}(X10)]	
6	2.0000	PC	R83-00000-18408	B83-00000-18408	CONNECTOR;40;0.5 MM;SMD;FH12-40S-0.5SV	[P0BI9:5: {1.0}(X15)]	
7	17.0000	PC	R83-00000-50403	B83-00000-50403	CONNECTOR;FFC;28 PIN;0.5 MM;SMD	[P0BI9:4: {9.0}(X1-X9)]	
8	1.0000	PC	R83-00000-57291	B83-00000-57291	CONNECTOR;MICRO SD;HINGE;8;GOLD;SMD;MOLEX: 5009010801	[P0B3I:16: {1.0}(X1)]	
9	1.0000	PC	R83-00000-70431	B83-00000-70431	CONNECTOR;FPC;50;PITCH:0MM5;HORIZONTAL;TAPE AND REEL	[P0BI9:00: {1.0}(X2)]	
10	1.0000	PC	R83-00000-80564	B83-00000-80564	CONNECTOR;24;1 MM;BRASS W TIN;VERTICAL;FPC;1.0D-24P	[P0BI9:6: {1.0}(X17)]	
11	1.0000	PC	R83-20184-37925	B83-20184-37925	CONNECTOR;FEMALE;ANGLED;USB;SINGLE;TYPE:B	[P0BIF:00: {1.0}(X6)]	
12	102.0000	PC	R84-00000-12192	B84-00000-12192	CONNECTOR;CRIMP;FEMALE;08-50-0031		
13	17.0000	PC	R84-00000-24530	B84-00000-24530	CONNECTOR;CRIMP;6;2.54 MM;FEMALE CRIMP;22012065		
14	9.0000	PC	R84-19056-06015	B84-19056-06015	CONNECTOR;TERMINAL;BRASS W TIN;AWG16-22;JS-4008-T		
15	11.0000	PC	R84-22000-06018	B84-22000-06018	CRIMP TERMINAL;PITCH:3mm96;AWG18-22;A3963TOP-2		
16	109.0000	PC	R84-25016-06014	B84-25016-06014	CRIMP TERMINAL;PITCH:2mm0;AWG24-30;A2008TOP-2		
17	1.0000	PC	R84-42050-00155	B84-42050-00155	CRIMP CONNECTOR;LUG;INNER DIA:4mm3;AWG 14-18;WIRE MOUNT;STRAIGHT		
18	5.0000	PC	R93-00000-51731	B93-00000-51731	BARE WIRE;2;SMD1206	[P0BI9:5: {5.0}(R91,R141,R154,R261,R270)]	
19	1.0000	PC	R93-80000-01038	B93-80000-01038	CONNECTOR;BATTERY HOLDER;(H2611)	[P0BI9:5: {1.0}(X16)]	
20	1.0000	PC	R95-00000-07475	B95-00000-07475	CONNECTOR;XLR;3;GOLD;FEMALE;STRAIGHT;NC3FAAV1	[P0BI9:6: {1.0}(X8)]	
21	16.0000	PC	R95-00000-10641	B95-00000-10641	CONNECTOR;XLR;3;GOLD;FEMALE;ANGLED;NC3FAAH1	[P0BI9:1: {8.0}(X5-X12)]	
22	8.0000	PC	R95-00000-10831	B95-00000-10831	CONNECTOR;XLR;3;GOLD;NC3MAAH	[P0BI9:9: {8.0}(X6-X13)]	
23	3.0000	PC	R95-00000-18292	B95-00000-18292	CONNECTOR;XLR;8;2.54 MM;SHIELDED;NEUTRIK: NE8FBH	[P0BI9:5: {3.0}(X4-X6)]	

Diode

	Quantity	Unit	S.Sku	M.Sku	Description	Reference Designators	Notes
1	2.0000	PC			DIODE;SCHOTTKY;SS0540;SOD123;SMD	[P0BI9:00: {2.0}(D2-D3)]	*NOT available in DP
2	66.0000	PC			DIODE;BAV103;SOD80;TEMIC	[P0B3I:16: {2.0}(D3-D4)]	*NOT available in DP
3	22.0000	PC			DIODE;BAV99;SOT23;SMD	[P0BI9:1: {10.0}(D2-D11)]	*NOT available in DP
4	2.0000	PC			DIODE;ER502;DO201AD	[P0BI9:10: {2.0}(D4,D15)]	*NOT available in DP
5	25.0000	PC			DIODE;LL4148;LL34;TEMIC OR FC;SMD	[P0BIF:00: {1.0}(D1)]	*NOT available in DP
6	32.0000	PC			DIODE;ZMM08V2;SMD1206;SMD	[P0BI9:1: {16.0}(D38,D43,D48,D53,D58,D63,D68,D73,D76-D83)]	*NOT available in DP
7	32.0000	PC			DIODE;ZMM12V0;SMD1206	[P0BI9:1: {16.0}(D12-D27)]	*NOT available in DP
8	3.0000	PC			DIODE;ZMM18V0;SMD1206	[P0BI9:10: {3.0}(D7-D8,D13)]	*NOT available in DP
9	1.0000	PC			DIODE;RECTIFIER;600 V;DO201AD;3A;ER306	[P0BI9:10: {1.0}(D5)]	*NOT available in DP
10	2.0000	PC			DIODE;RECTIFIER;40 V;FM5822;DO-214AB;SMD	[P0BI9:4: {1.0}(D1)]	*NOT available in DP
11	2.0000	PC			DIODE;UF4006;DO41	[P0BI9:10: {2.0}(D3,D11)]	*NOT available in DP
12	1.0000	PC			DIODE;RECTIFIER;SR360;DO201	[P0BI9:10: {1.0}(D14)]	*NOT available in DP
13	1.0000	PC			DUAL RECTIFIER;TO220;MBR20200FCT	[P0BI9:10: {1.0}(D25)]	*NOT available in DP
14	2.0000	PC			DIODE;5 V;RCLAMP0502B;SOT-523	[P0B3I:16: {2.0}(D1-D2)]	*NOT available in DP
15	3.0000	PC			DIODE;SUPERFAST;ES1D;200V;1A;15NS;DO-214AC;SMD	[P0BI9:10: {3.0}(D18,D22-D23)]	*NOT available in DP
16	1.0000	PC	X80-00000-12035	H80-00000-12035	RECTIFIER, BRIDGE;800 V;GBU;GBU8K;8A	[P0BI9:10: {1.0}(D6)]	

Display

	Quantity	Unit	S.Sku	M.Sku	Description	Reference Designators	Notes
1	1.0000	PC	S25-00000-69216	C25-00000-69216	DISPLAY;LCD;SIZE;5 inch;800X480;EJ050NA-01G		
2	17.0000	PC	S25-00001-04082	C25-00001-04082	DISPLAY;LCD;CABLE:23mm;DOT:128*64;28PIN;17.9x10.86mm;TSD2G2174		

Hardware

	Quantity	Unit	S.Sku	M.Sku	Description	Reference Designators	Notes
1	1.0000	PC			CABLE TIE;WIDTH:3mm;LENGTH:150mm		*NOT available in DP
2	2.0000	PC			CABLE TIE;25 MM;GREY;RIBBON CABLE CLAMP;PVC;SELF-ADHESIVE - 3M4945		*NOT available in DP
3	16.0000	PC			CABLE TIE;NYLON;4in;COLOR:		*NOT available in DP
4	3.0000	PC			WIRECLAMP;LUG;3mm;LENGTH:52mm;OUTER DIA;7mm5;PLASTIC COVERED STEEL;COLOR:BLK		*NOT available in DP
5	0.6500	G			THERM-GREASE;COLOR:WHT;SPEC.NO:09286		*NOT available in DP
6	2.8850	G			SCREWLOCK;SPEC.NO:01090		*NOT available in DP
7	6.0000	PC			NUT;M;3 MM;3.2 MM;HEX WASHER;7.3 MM;ZINC;BLUE;HEXAGON REC.;0.5 MM;M3*0.5mm NUT WITH TEETH EXTERNAL WASHER		*NOT available in DP
8	34.0000	PC			HEX.NUT T-NUT;M 0.5P;COPPPER NUT_REVA		*NOT available in DP
9	1.0000	PC			HEX. NUT;INNER DIA;M4mm;SURFACE:ZINC		*NOT available in DP
10	14.0000	PC			HEX. NUT;FOR JACK;M 3/8in;HEXWRENCH:11mm;THICKNESS:2mm;SURFACE:NICKEL/SLV		*NOT available in DP
11	1.0000	PC			OCT. NUT;FOR JACK;3/8in;OCTWRENCH:14.5mm;THICKNESS:3.5mm;SURFACE:NICKEL/SILVER		*NOT available in DP
12	1.0000	PC			SCREW;M;3 MM;15 MM;PAN WASHER;ZINC;BLUE/WHITE;PHILIPS REC.;0.5 MM;M3mm*15mm;HEAD:PAN&SPRING WASHER;BLUE/ZINC		*NOT available in DP
13	34.0000	PC			SCREW;2 MM;3 MM;PAN;NICKEL;SILVER;CROSS REC.;P0AHW MACHINE SCREW M2X3 REVA		*NOT available in DP
14	68.0000	PC			SCREW;M;2 MM;6 MM;BINDING;ZINC;SILVER;PHILIPS REC.;0.4 MM;MACHINE SCREW		*NOT available in DP
15	34.0000	PC			SCREW;3 MM;M3 MOUNTING SCREW2 REVA		*NOT available in DP
16	72.0000	PC			SCREW;M;3 MM;8 MM;PAN WASHER;5 MM;SILVER/ZINC;PHILIPS REC.;0.5 MM;M03mm*08mm; PAN SPRING WASHER;:PHILIPS REC;H		*NOT available in DP
17	8.0000	PC			SCREW;M;DIA:4 MM;LEN:15 MM;PAN;OD:7 MM;OXIDE;BROWN METALLIC DARK;TORX;PITCH:0.7 MM;PAN-HEAR-TORX M4-15 SCREW		*NOT available in DP
18	6.0000	PC			SCREW;M;DIA:4 MM;LEN:9 MM;PAN;OD:7 MM;OXIDE;BROWN METALLIC DARK;TORX;PITCH:0.7 MM;PAN-HEAR-TORX M4-9 SCREW		*NOT available in DP
19	12.0000	PC			SCREW;M;DIA:3 MM;LEN:6 MM;BINDING;OD:6.2 MM;ZINC;BLACK;TORX;PITCH:0.5 MM;M3X6 MM, BINDDING, TORX,BLACK ZINC		*NOT available in DP
20	24.0000	PC			SCREW;M;DIA:3 MM;LEN:6 MM;FLAT 5,2mm;OD:5.2 MM;ZINC;BLACK;TORX;PITCH:0.5 MM;M3X6 MM, FLAT, TORX,BLACK ZINC		*NOT available in DP
21	8.0000	PC			SCREW;M;DIA:4 MM;LEN:6 MM;FLAT ;OD:7.4 MM;ZINC;BLACK;TORX;PITCH:0.7 MM;M4X6 MM, FLAT, TORX,BLACK ZINC		*NOT available in DP
22	57.0000	PC			SCREW;A;DIA:3 MM;LEN:10 MM;CHEESE;OD:5.5 MM;NICKEL;SILVER/WHITE;HEXAGON REC.;P0B3I-XLR-SCREW-REVA		*NOT available in DP
23	4.0000	PC			SCREW;M3mm*8mm;HEAD:PAN SPRING WASHER;INSERT:PHILIPS REC.;SURFACE:SILVER/NIC		*NOT available in DP
24	1.0000	PC			SCREW;M3mm*10mm;HEAD:PAN SPRING WASHER;INSERT:PHILIPS REC.;SURFACE:SILVER/NIC		*NOT available in DP
25	37.0000	PC			SCREW;M3mm*6mm;PITCH:0mm5;HEAD:FLAT;DIA:5mm2;INSERT:PHILIPS REC.;SURFACE:BLACK/ZINC		*NOT available in DP
26	20.0000	PC			SCREW;BT3mm*8mm;HEAD:PAN;INSERT:PHILLIPS REC.;SURFACE:BLACK/ZINC		*NOT available in DP
27	4.0000	PC			SCREW;M4mm*12mm;HEAD:PAN WASHER DIA 9mm;INSERT:PHILIPS REC.;SURFACE:BLACK/ZINC		*NOT available in DP
28	2.0000	PC	V89-07000-00000	F89-07000-00000	INSULATION SHEET;SI-RUBBER;TO220 W/HOLE		T6,IC4
29	1.0000	PC	V89-35000-00001	F89-35000-00001	INSULATION SHEET;SI-RUBBER;TO264 W/HOLE		IC2

	Quantity	Unit	S.Sku	M.Sku	Description	Reference Designators	Notes
30	1.0000	PC			SHIELD;XLR MALE;DWG.NO:13436;(R14-SRC2000-XLRSHIELDMALE-REVG.DWG)	[P0BI9:6: {1.0}(M5)]	*NOT available in DP
31	2.0000	PC			SILICA GEL;SILICAGEL;MASS;50g		*NOT available in DP
32	1.0000	PC			STUD;BRASS;STUD, THROUGH HOLE,DIA 3MM5,LENGTH 7MM4,		*NOT available in DP
33	2.0000	PC			STUD;M;3 MM;31.1 MM;HEX;0.5 MM;P0AWQ-INPUT-PCB-STUD-REVA		*NOT available in DP
34	4.0000	PC			STUD;3 MM;28.5 MM;5.5 MM;0.5 MM;STUD_M3X28.5		*NOT available in DP
35	1.0000	PC			STUD;M;3 MM;9.2 MM;HEX;0.5 MM;STUD-M3X9.2 ;THRUST		*NOT available in DP
36	2.0000	PC			STUD;M;DIA:3 MM;LEN:12.9 MM;OD:5.5 MM;PITCH:0.5 MM;STUD_M3-12.9		*NOT available in DP
37	0.0300	M			SHRINKING TUBE;BLACK;HEAT SHRINK TUBING;2:1;35mm;5M		*NOT available in DP
38	1.0060	M			SHRINKING TUBE;INNER DIA;1mm;SPEC.NO:43217		*NOT available in DP
39	0.0680	M			SHRINKING TUBE;INNER DIA;1mm5;SPEC.NO:01096		*NOT available in DP
40	30.0000	MM			SHRINKING TUBE;INNER DIA;2MM;SPEC NO:15747		*NOT available in DP
41	0.5180	M			SHRINKING TUBE;INNER DIA;3mm;SPEC.NO:01097		*NOT available in DP
42	2.9610	M			SHRINKING TUBE;INNER DIA;4mm;SPEC.NO:01098		*NOT available in DP
43	0.1000	M			SHRINKING TUBE;INNER DIA;6mm;SPEC.NO:01099		*NOT available in DP
44	0.0220	M			SHRINKING TUBE;INNER DIA:20mm;THICKNESS:0mm5		*NOT available in DP
45	1.0000	PC			WASHER;9.7 MM;16 MM;NICKEL;WHITE;WASHER;FLAT;DIM:9.7*16*0.5mm;NIC		*NOT available in DP
46	14.0000	PC			WASHER;PLAIN;INNER DIA:9mm6;OUTER DIA:13mm;THICKNESS;0mm5;PLATING:NICKEL		*NOT available in DP
47	1.0000	PC			WASHER;SPRING;INNER DIA:4mm;OUTER DIA:7mm;THICKNESS;1mm7		*NOT available in DP
48	1.0000	PC			WASHER;EXTERNAL TEETH;INNER DIA:4mm;OUTER DIA:7mm;THICKNESS;1mm7		*NOT available in DP
49	68.0000	PC	V97-00000-23337	F97-00000-23337	OTHER;RUBBER RING_REVA		
50	34.0000	PC	V97-00000-23339	F97-00000-23339	OTHER;EVA RING_REVA		
51	17.0000	PC	V97-00000-23348	F97-00000-23348	OTHER;SLIDE SHAFT_REVA		
52	34.0000	PC		F97-00000-23361	SHEET;PCB CONTACT SHEET		
53	1.0000	PC	V97-00000-54455	F97-00000-54455	FOAM SHEET;P0AAQ-CONDUCTIVE-FOAM1.REVA		
54	1.0000	PC	V97-00000-78879	F97-00000-78879	PC_SHEET;P0AWQ-CABLE-SPACER		
55	2.0000	PC	V97-00000-83715	F97-00000-83715	FOAM SHEET;P0AWP-CONDUCTIVE_SPONGE;REVA		
56	2.0000	PC			BUSHING;MINIATURE;NYLON;DWG.NO:27886;(R20-SC-PLA_NYLBUSHM3x1_4.DWG)		*NOT available in DP
57	0.1000	M			SHRINKING TUBE;INNER DIA;6mm;SPEC.NO:01099		*NOT available in DP
58	0.0680	M			SHRINKING TUBE;INNER DIA;1mm5;SPEC.NO:01096		*NOT available in DP
59	4.0000	PC			SCREW;M3mm*8mm;HEAD:PAN SPRING WASHER;INSERT:PHILIPS REC.;SURFACE:SILVER/NIC		*NOT available in DP
60	0.0220	M			SHRINKING TUBE;INNER DIA:20mm;THICKNESS:0mm5		*NOT available in DP
61	2.0000	PC	V89-07000-00000	F89-07000-00000	INSULATION SHEET;SI-RUBBER;TO220 W/HOLE		(EU, UL, JP, UK, SAA, BR, AR)
62	1.0000	PC	V89-35000-00001	F89-35000-00001	INSULATION SHEET;SI-RUBBER;TO264 W/HOLE		(EU, UL, JP, UK, SAA, BR, AR)
63	2.0000	PC			BUSHING;MINIATURE;NYLON;DWG.NO:27886;(R20-SC-PLA_NYLBUSHM3x1_4.DWG)		*NOT available in DP
64	1.0000	PC			SCREW;M3mm*10mm;HEAD:PAN SPRING WASHER;INSERT:PHILIPS REC.;SURFACE:SILVER/NIC		*NOT available in DP

Ic

	Quantity	Unit	S.Sku	M.Sku	Description	Reference Designators	Notes
1	2.0000	PC	S60-00000-10781	C60-00000-10781	IC;AD/DA;LQFP;48;CS5368-CQZ	[P0BI9:1: {1.0}(IC4)]	
2	1.0000	PC	S60-00000-18248	C60-00000-18248	IC;AD/DA;52;CS42438;MQFP;SMD	[P0BI9:5: {1.0}(IC17)]	
3	2.0000	PC	S60-56154-30520	C60-56154-30520	IC;CONVERTER;TLC1543CDW;SO20	[P0BI9:4: {1.0}(IC4)]	
4	1.0000	PC	S71-00000-70449	C71-00000-70449	IC;DRIVER;6;SMD;QFN;TPS61161DRVR	[P0BI9:00: {1.0}(IC1)]	
5	77.0000	PC	S73-59458-00508	C73-00000-29050	IC;OPAMP;SMD;SOP;8;BA4580RF	[P0BI9:1: {21.0}(IC2,IC33-IC52)]	
6	5.0000	PC	S73-00001-20642	C73-00001-20642	IC;OPAMP;SO;PINS:14;TL074 - ST ONLY	[P0BI9:5: {5.0}(IC14-IC15,IC18-IC19,IC23)]	
7	2.0000	PC	S73-59458-00408	C73-59458-00408	IC;OPAMP OPAMP;NJM4580L;SIP	[P0BI9:2: {2.0}(IC1-IC2)]	
8	1.0000	PC	S74-00000-20055	C74-00000-20055	IC;POWER-CONVERSION;SOT23;5;MP1541	[P0BI9:00: {1.0}(IC2)]	
9	2.0000	PC	S74-00000-29817	C74-00000-29817	IC;POWER-CONVERSION;AIC2354GV5;SOT-23-5;SMD	[P0BIF:00: {1.0}(IC1)]	
10	1.0000	PC	S74-00000-80176	C74-00000-80176	IC;POWER-CONVERSION;SOIC;8;DRIVER;IR1167ASPbF	[P0BI9:10: {1.0}(IC7)]	
11	2.0000	PC	S74-09043-10803	C74-09043-10803	IC;VOLT.REGULATOR;TL431C;TO92;TAPING	[P0BI9:10: {2.0}(IC3,IC6)]	
12	2.0000	PC	S74-66159-10508	C74-66159-10508	IC;CONVERTER;MP1591DS;SO8/150;SMD	[P0BI9:4: {1.0}(IC30)]	
13	1.0000	PC	S75-00226-90508	C75-00226-90508	IC;PWM;OB2269C;SOP8	[P0BI9:10: {1.0}(IC1)]	
14	1.0000	PC	S75-A0088-08405	C75-A0088-08405	IC;PWM;FS7M0880TU;TO-3P-5L	[P0BI9:10: {1.0}(IC2)]	
15	1.0000	PC	S77-00000-18293	C77-00000-18293	IC;VOLT.REGULATOR;DC to DC;32;ADP2114ACPZ-R7;CP-32-2;SMD	[P0BI9:5: {1.0}(IC28)]	
16	1.0000	PC	S77-00107-03115	C77-00107-03115	IC;VOLT.REGULATOR;LM317HVT;TO220	[P0BI9:10: {1.0}(IC4)]	
17	7.0000	PC	S77-00128-03001	C77-00128-03001	IC;VOLT.REGULATOR;ADJUSTABLE;SOT223;NCP1117STAT3;SMD	[P0BI9:1: {2.0}(IC1,IC6)]	
18	1.0000	PC	S77-00155-03001	C77-00155-03001	IC;VOLT.REGULATOR;ADJUSTABLE;DPAK;NCP1117DTARKG;SMD	[P0BIF:00: {1.0}(IC6)]	
19	4.0000	PC	S77-03128-03001	C77-03128-03001	IC;VOLT.REGULATOR;NCP1117ST33T3;SOT223	[P0BI9:5: {1.0}(IC29)]	
20	1.0000	PC	S77-18128-03001	C77-18128-03001	VOLT.REGULATOR;AZ1117H-1.8TRE1;SOT223;SMD	[P0B3I:16: {1.0}(IC6)]	
21	1.0000	PC	T10-00000-18827	D10-00000-18827	IC;ASIC;MSOP;10;CS2000CP-CZZR	[P0BI9:5: {1.0}(IC20)]	
22	1.0000	PC	T10-00000-78020	D10-00000-78020	IC;ASIC;124;SMD;XS1-L16A-128-QF124-C10	[P0BIF:00: {1.0}(IC48)]	
23	1.0000	PC	T10-00000-78031	D10-00000-78031	IC;USB Transceiver;QFN;32;SMD;USB3340	[P0BIF:00: {1.0}(IC3)]	
24	4.0000	PC	T12-00000-12043	D12-00000-12043	IC;DIG COMM.;SOIC;8;MLVDS TRANSCEIVER;SMD;SN65MLVD204AD	[P0BI9:5: {4.0}(IC9-IC10,IC12-IC13)]	
25	3.0000	PC	T12-00000-18249	D12-00000-18249	IC;DIG COMM.;QFN;24;SMD;LAN8720A-CP	[P0B3I:16: {1.0}(IC4)]	
26	1.0000	PC	T13-00000-99937	D13-00000-99937	IC;TOUCH SENSOR;SMD;QFN;PINS:16;CAP1208-1-A4-TR	[P0BI9:3: {1.0}(IC1)]	
27	1.0000	PC	T13-00000-99939	D13-00000-99939	IC;TOUCH SENSOR;SMD;TDFN;PINS:8;CAP1203-1-AC3-TR	[P0BI9:4: {1.0}(IC2)]	
28	1.0000	PC	T13-00000-99941	D13-00000-99941	IC;TOUCH SENSOR;SMD;DFN;PINS:10;CAP1206-1-AIA-TR	[P0BI9:4: {1.0}(IC1)]	
29	2.0000	PC	T17-00001-16874	D17-00001-16874	IC;SDRAM;SMD;TSOP;PINS:54;TAPE AND REEL;MT48LC8M16A2P-6A:L	[P0BI9:5: {2.0}(IC24,IC26)]	
30	2.0000	PC	T18-00000-18247	D18-00000-18247	IC;DSP;LQFP;208;ADSP-21371KSWZ-2B;SMD	[P0BI9:5: {2.0}(IC25,IC27)]	
31	3.0000	PC	T19-00037-04631	D19-00037-04631	IC;FLASH;STM32F103RBT6;LQFP64;32-Bit MCU with Flash Memory	[: {1.0}(IC7)]	
32	1.0000	PC	T19-00074-05121	D19-00074-05121	IC;FLASH MEMORY;W25X40CLSNIG;SMD;SOIC-8	[: {1.0}(IC67)]	
33	1.0000	PC	T22-00000-18232	D22-00000-18232	IC;LOGIC;5;74LVC1G07GV;SOT753;SMD	[P0BI9:5: {1.0}(IC3)]	
34	1.0000	PC	T22-00000-78023	D22-00000-78023	IC;LOGIC;BUFFER;SC70-6;SMD;NC7WZ07P6X	[P0BIF:00: {1.0}(IC8)]	
35	2.0000	PC	T22-27010-82805	D22-27010-82805	IC;LOGIC;74LVC1G08;SOT-23;5PIN;SMD	[P0BI9:1: {1.0}(IC7)]	
36	3.0000	PC	T22-27024-50520	D22-27024-50520	IC;LOGIC;74LVC245;SOP	[P0BI9:1: {1.0}(IC5)]	
37	21.0000	PC	T22-31016-50516	D22-31016-50516	IC;LOGIC;74HC165;SOP	[P0BI9:4: {4.0}(IC26-IC29)]	
38	4.0000	PC	T22-32027-30520	D22-32027-30520	IC;LOGIC;74HCT273;SOP	[P0BI9:4: {2.0}(IC5-IC6)]	
39	85.0000	PC	T22-32059-50520	D22-32059-50520	IC;LOGIC;74HCT595;SOP	[P0BI9:1: {9.0}(IC8-IC9,IC11,IC13,IC15,IC17,IC19,IC21,IC23)]	
40	4.0000	PC	T24-18081-61832	D24-18081-61832	IC;MICROCONTROLLER;ATMEGA8A-AU;SMD;TQFP32	[: {1.0}(IC7)]	
41	2.0000	PC	T24-48030-02803	D24-48030-02803	IC;MICROCONTROLLER;MAX809STRG;Vth:2.93V;SOT	[P0BIF:00: {1.0}(IC5)]	
42	1.0000	PC	T26-00001-00293	D26-00001-00293	IC;CPLD;SMD;TQFP;PINS:144;XC95288XL-10TQG144C	[: {1.0}(IC2)]	
43	4.0000	PC	T28-00000-10867	D28-00000-10867	IC;DIGITAL AUDIO;TSSOP;28;MULTIBIT DAC W/ VOLUME CTRL;CS4398-CZZ	[P0B3I:2: {4.0}(IC5-IC8)]	

	Quantity	Unit	S.Sku	M.Sku	Description	Reference Designators	Notes
44	1.0000	PC	T28-54534-00616	D28-54534-00616	IC;CONVERTER A/D CONVERTER;CS5340-CZZ;TSSOP	[P0BI9:5: {1.0}(IC16)]	
45	1.0000	PC	T29-00000-18234	D29-00000-18234	IC;SRAM;SOIC;8;ISL1208IB8Z;SMD	[P0B3I:16: {1.0}(IC2)]	
46	1.0000	PC	T29-00000-29818	D29-00000-29818	IC;SRAM;60;IS43LR16320B-6BL;BGA;SMD	[P0B3I:16: {1.0}(IC1)]	
47	32.0000	PC	T30-00000-61526	D30-00000-61526	IC;SWITCH/MUPLEX;SMD;SOIC;16;V411	[P0BI9:1: {16.0}(IC10,IC12,IC14,IC16,IC18,IC20,IC22,IC24-IC32)]	
48	1.0000	PC	T30-02206-52208	D30-02206-52208	IC;SWITCH/MUPLEX;POWER DISTRIBUTION SWITCH;1A;SOIC;TPS2065D	[P0B3I:16: {1.0}(IC5)]	
49	1.0000	PC	T32-00000-18409	D32-00000-18409	IC;EPROM;PROGM;BGA;256;XC3S1400A-4FTG256C;SMD	[P0BI9:5: {1.0}(IC21)]	
50	1.0000	PC	T33-00000-29831	D33-00000-29831	IC;MICROCONTROLLER, PROGRAMMED;MCIMX253DJM4A;17X17 MAPBGA-400;SMD	[P0B3I:16: {1.0}(IC3)]	
51	1.0000	PC		D33-00001-05677	IC;MICROCONTROLLER, PROGRAMMED;FIRMWARE M32 8CHOUT CPLD V01	[P0B3I:2: {1.0}(IC2)]	
52	1.0000	PC		D33-00001-08689	IC;MICROCONTROLLER, PROGRAMMED;FIRMWARE ATMEGA8A-AU;M32 8CHOUT;REV 1.0	[P0B3I:2: {1.0}(IC1)]	
53	1.0000	PC		D33-00001-08702	IC;MICROCONTROLLER, PROGRAMMED;FIRMWARE ATMEGA8A-AU;DN32-USB V3	[P0BIF:00: {1.0}(IC7)]	
54	1.0000	PC		D33-00001-16250	IC;MICROCONTROLLER, PROGRAMMED;MICROCONTROLLER;W25X40CL;DN32-USB V010	[P0BIF:00: {1.0}(IC67)]	
55	1.0000	PC		D33-00001-19804	IC;MICROCONTROLLER, PROGRAMMED;FIRMWARE STM32F103RBT6;M32R FADER_L V0.7	[P0BI9:3: {1.0}(IC6)]	
56	1.0000	PC		D33-00001-19808	IC;MICROCONTROLLER, PROGRAMMED;FIRMWARE STM32F103RBT6;M32R FADER_R V0.7	[P0BI9:4: {1.0}(IC7)]	
57	1.0000	PC		D33-00001-19810	IC;MICROCONTROLLER, PROGRAMMED;FIRMWARE STM32F103RBT6;M32R CHEDIT V0.7	[P0BI9:2: {1.0}(IC4)]	
58	2.0000	PC		D33-00001-19839	IC;MICROCONTROLLER, PROGRAMMED;FIRMWARE ATMEGA8A-AU;M32R 8CHIN;REV 1.0	[P0BI9:1: {1.0}(IC3)]	
59	1.0000	PC		D33-00001-23668	IC;MICROCONTROLLER, PROGRAMMED;EPROM DATA;SD-Card Image Build;V2.12 and V2.12		

Led

	Quantity	Unit	S.Sku	M.Sku	Description	Reference Designators	Notes
1	1.0000	PC	U10-00000-13289	E10-00000-13289	LED HIB;3mm0 ROUND;RED;Len: White Diffuse; Head BASE: 4.5X5.08	[P0BIF:00: {1.0}(LD1)]	
2	117.0000	PC	U10-00000-19576	E10-00000-19576	LED HIB;TRANSPARENT AMBER;SMD603	[P0BI9:2: {117.0}(LD44-LD45,LD47-LD56,LD58-LD65,LD79,LD81-LD82,LD84,LD87,LD89-LD90,LD92-LD93,LD95,LD97-LD98,LD100-LD107,LD110-LD111,LD113-LD135,LD149-LD150,LD152-LD153,LD156,LD158,LD162-LD163,LD169-LD170,LD172-LD174,LD180-LD181,LD183-LD186,LD189-LD190,LD192-LD193,LD195-LD196,LD198,LD200-LD201,LD203,LD205,LD207,LD209-LD210,LD212-LD215,LD218-LD219,LD221-LD233)]	
3	61.0000	PC	U10-00000-39409	E10-00000-39409	LED HIB;GREEN;SMD603	[P0BI9:4: {16.0}(LD55-LD62,LD64-LD71)]	
4	136.0000	PC	U10-00000-39410	E10-00000-39410	LED HIB;WHITE;SMD603	[P0BI9:4: {28.0}(LD2,LD4,LD6,LD8,LD10,LD12,LD14,LD16,LD18,LD29,LD31,LD33,LD35,LD37,LD39,LD41,LD43,LD45,LD54,LD114,LD116,LD118,LD120,LD122,LD124,LD126,LD128,LD130)]	
5	35.0000	PC	U10-00000-39411	E10-00000-39411	LED HIB;AMBER;SMD805	[P0BI9:2: {35.0}(LD8,LD10,LD16,LD18,LD20,LD24,LD26,LD28,LD30,LD32,LD36,LD38,LD40-LD42,LD67,LD69,LD71,LD74,LD76,LD78,LD86,LD138,LD140,LD142,LD144,LD146,LD148,LD166-LD167,LD171,LD188,LD239,LD241,LD243)]	
6	59.0000	PC	U10-00000-39413	E10-00000-39413	LED HIB;RED;SMD805	[P0BI9:4: {25.0}(LD1,LD3,LD5,LD7,LD9,LD11,LD13,LD15,LD17,LD46-LD53,LD96-LD103)]	
7	18.0000	PC	U10-00000-79125	E10-00000-79125	LED HIB;WAVELENGTH:586-596nm;TRANSPARENT AMBER;SMD805	[P0BI9:4: {10.0}(LD28,LD30,LD32,LD34,LD36,LD38,LD40,LD42,LD44,LD63)]	
8	16.0000	PC		E10-00001-32422	LED HIB;3mm0 ROUND;RED;RED 3MM BASE 4.5X5.08X6 CHAMFER	[P0BI9:1: {8.0}(LD1-LD8)]	
9	3.0000	PC	U10-09590-02370	E10-09590-02370	LED;SMD;WAVELENGTH:465nm;COLOR:YELLOW;REFLECTOR:WATER CLEAR;(LIGITEK LG-192VY-CT)	[P0BI9:5: {3.0}(LD1-LD3)]	
10	126.0000	PC	U14-00000-33405	E14-00000-33405	LED SUB;AMBER;SMD603;WATER CLEAR	[P0BI9:4: {33.0}(LD72-LD95,LD104-LD112)]	
11	26.0000	PC	U14-00000-48567	E14-00000-48567	LED SUB;SMD;BLUE;SMD805;WL:464-467nm;Iv:225-295mcd	[P0BI9:4: {9.0}(LD113,LD115,LD117,LD119,LD121,LD123,LD125,LD127,LD129)]	
12	17.0000	PC	U15-00000-40123	E15-00000-40123	LED HIB;BLUE/GREEN/RED;SMD;SIZE: 3.5X2.8	[P0BI9:4: {9.0}(LD19-LD27)]	

Metal Part

	Quantity	Unit	S.Sku	M.Sku	Description	Reference Designators	Notes
1	34.0000	PC	Q60-00000-23296	A60-00000-23296	METAL;P0AHW;AL 6063;COVER;PUNCHING;SIDE METAL COVER_REVA		
2	1.0000	PC	Q60-00001-04608	A60-00001-04608	METAL;SHEET;P0BI9;MATERIAL:ALU 0.5mm;PUNCHING;ANODIZING;SILVER;P0BI9-ALUMINUM DECORATION SHEET LEFT REV.A		
3	1.0000	PC	Q60-00001-04609	A60-00001-04609	METAL;SHEET;P0BI9;MATERIAL:ALU 0.5mm;PUNCHING;ANODIZING;SILVER;P0BI9-ALUMINUM DECORATION SHEET RIGHT REV.A		
4	1.0000	PC	Q60-00001-15486	A60-00001-15486	METAL;SHIELD;P0AWN;MATERIAL:SECC 0.5mm;PUNCHING AND BENDING;P0AWN-SHIELDING_SHEET;REVB		
5	1.0000	PC	Q62-00000-58228	A62-00000-58228	METAL;P0AAQ;TIN PLATE T=0.3mm;SHIELD;BENDING + PUNCHING	[P0BI9:5: {1.0}(M7)]	
6	1.0000	PC	Q62-00000-89890	A62-00000-89890	METAL;SHEET;P0AWQ;MATERIAL:TIN PLATE T=0.3 MM;PUNCHING AND BENDING;P0AWQ AUX SHIELDING SHEET		
7	2.0000	PC	Q63-00000-80713	A63-00000-80713	METAL;HEATSINK;P0AWQ;AL 6063;X32_P heatsink-1	[P0BI9:10: {2.0}(HS1,HS5)]	
8	3.0000	PC	Q63-00000-80716	A63-00000-80716	METAL;HEATSINK;P0AWQ;AL 6063;X32 P_HEATSINK 2	[P0BI9:10: {3.0}(HS2-HS4)]	
9	2.0000	PC	Q65-00000-06911	A65-00000-06911	METAL;P0ACL;SUS 201;MACHINING;DRAW_PULL;REV:A		
10	17.0000	PC		A65-00000-23310	METAL;P0AHW;ALUMINIUM;LEVER;CASTING + MACHINING;SLIDE LEVER METAL_REVA		
11	3.0000	PC	Q65-00000-24959	A65-00000-24959	METAL;P0274;SPCC 0.8mm;MOUNT;BENDING + PUNCHING;PLATING TIN;MOUNTING HELP;I00053P;REV:B	[P0BIF:00: {3.0}(M1-M3)]	
12	4.0000	PC	Q65-00000-37710	A65-00000-37710	METAL;P0AAQ;SECC 2.0mm;HOLDER;BENDING + PUNCHING;P0AAQ-FADER-BRACKET-RAIL-REVA		
13	17.0000	PC	Q65-00000-59890	A65-00000-59890	METAL;P0AHW;ALUMINIUM;BASE;EXTRUSION, CUTTING;BLACK ANODIZED;BLACK;SLIDE BASE REV.B		
14	17.0000	PC	Q65-00000-60470	A65-00000-60470	METAL;P0AHW;ALUMINIUM;COVER;BENDING + PUNCHING;MATT;ANODIZING;BLACK;DUST COVER REV.B		
15	1.0000	PC	Q65-00000-71703	A65-00000-71703	METAL;SHIELD;P0AWQ;SECC 1.0mm;BENDING PUNCHING;P0AWQ-psu-shielding-bottom-vent REVA		
16	1.0000	PC	Q65-00000-71708	A65-00000-71708	METAL;SHIELD;P0AWQ;SECC 1.0mm;BENDING PUNCHING;P0AWQ-display-shielding-sheet REVA		
17	1.0000	PC	Q65-00000-75132	A65-00000-75132	METAL;SHIELD;P0AWP;TIN PLATE T=0.3 MM;BENDING;P0AWP-PCB_SHILEDING_COVER;REVA		
18	17.0000	PC	Q65-00000-95881	A65-00000-95881	METAL;BRACKET;P0B3I;MATERIAL:SECC 1.0mm;BENDING + PUNCHING;P0B3I-BRACKET_FADER-REVA		
19	1.0000	PC	Q65-00001-04616	A65-00001-04616	METAL;SHIELD;P0BI9;MATERIAL:SECC 1.0mm;BENDING PUNCHING;NATURAL;P0BI9-CARD-CAGE REVA		
20	1.0000	PC	Q65-00001-05443	A65-00001-05443	METAL;SHIELD;P0BI9;MATERIAL:SECC 1.0mm;BENDING + PUNCHING;P0BI9-PSU-SHIELDING-COVER REVA		
21	2.0000	PC	Q65-00001-09015	A65-00001-09015	METAL;RACK;P0BI9;MATERIAL:SECC 1.5mm;PUNCHING AND BENDING;POWDER COATING;426C;P0BI9-RACKMOUNT REVA		
22	17.0000	PC	Q65-00001-18328	A65-00001-18328	METAL;BASE;P0AHW;MATERIAL:ALUMINIUM;EXTRUSION, CUTTING;ANODIZING BLACK;BLACK;SLIDE BASE REV.B		
23	1.0000	PC	Z00-00001-04262	J00-00001-04262	METAL;PANEL;P0BIF;MATERIAL:SECC 1.2mm;BLANKING + PUNCHING;PAINTING NORMAL;BLACK;COVER;A001		
24	1.0000	PC	Z02-00001-07076	J02-00001-07076	METAL;PANEL;P0BI9;MATERIAL:SECC 1.2mm;YS1287A;BENDING + PUNCHING;POWDER COATING;426C;TOP;A001		
25	1.0000	PC	Z02-00001-07078	J02-00001-07078	METAL;PANEL;P0BI9;MATERIAL:SECC 1.2mm;BENDING + PUNCHING;POWDER COATING;BLACK;BOTTOM;A001		
26	2.0000	PC	Z05-00001-03028	J05-00001-03028	METAL;LOGO;P0B3I;MATERIAL:ALUMINIUM;GLOSSY;DIECASTING;PLATING NICKEL;SILVER;MIDAS LOGO BADGE;A001		

Plastic Part

	Quantity	Unit	S.Sku	M.Sku	Description	Reference Designators	Notes
1	4.0000	PC	W51-00200-02403	G51-00200-02403	RUBBER FOOT;BLACK;SIZE:37MM5*15MM;COLOR:BLK;DST.NO:002;DPT.NO:02403;(RUBFOOT_WASHER-15MM-REVB.DWG);SIZE:37mm5*15mm		
2	3.0000	PC	W52-00000-96047	G52-00000-96047	PLASTIC;KNOB;P0B3I;ABS;SILVER;VR-KNOB REV.A		
3	9.0000	PC	W52-00000-96072	G52-00000-96072	PLASTIC;KNOB;P0B3I;ABS;SILVER;LED-COLLAR-KNOB REV.A		
4	6.0000	PC	W52-00001-11484	G52-00001-11484	PLASTIC;KNOB;P0BI9;ABS + PC;INJECTION;ANODIZING CHROME(III);CHROME;BLACK;WHITE;P0BI9-ENCODER-KNOB REVA		
5	34.0000	PC	W53-00000-23287	G53-00000-23287	PLASTIC;P0AHW;ABS;COVER;BLACK;SIDE PLASTIC COVER_REVA		
6	17.0000	PC		G53-00000-23315	PLASTIC;P0AHW;ABS;LEVER;BLACK;SLIDE LEVER PLASTIC SUPPORT_REVA		
7	34.0000	PC		G53-00000-23318	PLASTIC;P0AHW;ABS;TUBE;BLACK;SLIDE LEVER SHAFT TUBE		
8	1.0000	PC	W53-00000-35748	G53-00000-35748	PLASTIC;P0AAQ;ABS;HOLDER;BLACK;P0AAQ-LED_METER_EQ-REVA		
9	2.0000	PC	W53-00000-35749	G53-00000-35749	PLASTIC;P0AAQ;ABS;HOLDER;BLACK;P0AAQ-LED_METER_SINGLE-REVA		
10	17.0000	PC	W53-00000-56330	G53-00000-56330	PLASTIC;P0AAQ;POM (Polyoxymethylene);WHEEL;INJECTION;GLOSS HIGH;BLACK;P0AAQ-WHEEL-REVA		
11	17.0000	PC	W53-00000-58726	G53-00000-58726	PLASTIC;P0AAQ;RACK;INJECTION;P0AAQ-FADER-BELT		
12	1.0000	PC	W53-00000-71590	G53-00000-71590	PLASTIC;MOUNT;P0AWQ;ABS;INJECTION;BLACK;P0AWQ-LCD-MOUNTING-LEFT REVA		
13	1.0000	PC	W53-00000-71591	G53-00000-71591	PLASTIC;MOUNT;P0AWQ;ABS;INJECTION;BLACK;P0AWQ-LCD-MOUNTING-RIGHT REVA		
14	1.0000	PC	W53-00000-71592	G53-00000-71592	PLASTIC;BUTTON;P0AWQ;RUBBER;MOULDING BLOW;TRANSPARENT WHITE DIFFUSED;p0awq-display-rubber-4 REVA		
15	2.0000	PC	W53-00000-71593	G53-00000-71593	PLASTIC;BUTTON;P0AWQ;RUBBER;MOULDING BLOW;TRANSPARENT WHITE DIFFUSED;p0awq-display-rubber-5 REVA		
16	1.0000	PC	W53-00000-75327	G53-00000-75327	PLASTIC;BRACKET;P0AWQ;ABS;INJECTION;POLISHED;BLACK;P0AWQ-DISPLAY-BUTTTON-BRACKET REVA		
17	18.0000	PC	W53-00000-77640	G53-00000-77640	PLASTIC;EPE;P0AAQ;ABS PC;1 and 2 SHOT INJECTION MOULDING;YS11001A;BLACK;TRANSPARENT;P0AAQ-LED_METER REV B		
18	1.0000	PC	W53-00000-95806	G53-00000-95806	PLASTIC;HOUSING;P0B3I;ABS PA757;INJECTION;PAINTING NORMAL;SILVER;HOUSING REC2 REV.A		
19	4.0000	PC	W53-00000-95808	G53-00000-95808	PLASTIC;HOUSING;P0B3I;ABS PA757;INJECTION;PAINTING NORMAL;SILVER;HOUSING REC1 REV.A		
20	1.0000	PC	W53-00000-95810	G53-00000-95810	PLASTIC;HOUSING;P0B3I;ABS PA757;INJECTION;PAINTING NORMAL;SILVER;HOUSING R1 REV.A		
21	2.0000	PC	W53-00000-95990	G53-00000-95990	PLASTIC;HOUSING;P0B3I;ABS PA757;INJECTION;PAINTING NORMAL;SILVER;HOUSING-R8 REV.A		
22	2.0000	PC	W53-00000-95991	G53-00000-95991	PLASTIC;HOUSING;P0B3I;ABS PA757;INJECTION;PAINTING NORMAL;SILVER;HOUSING-REC-8 REV.A		
23	1.0000	PC	W53-00000-95992	G53-00000-95992	PLASTIC;HOUSING;P0B3I;ABS PA757;INJECTION;PAINTING NORMAL;SILVER;HOUSING R1REC2 REV.A		
24	2.0000	PC	W53-00000-96005	G53-00000-96005	PLASTIC;HOUSING;P0B3I;ABS PA757;INJECTION;PAINTING NORMAL;SILVER;HOUSING-OVAL8 REV.A		
25	9.0000	PC	W53-00000-97898	G53-00000-97898	PLASTIC;HOLDER;P0AAQ;ABS PC;2-SHOT INJECTION MOULDING;YS11001A;TRANSPARENT;BLACK;P0AAQ-LED-COLLAR-REVB		
26	17.0000	PC	W53-00000-50594	G53-00001-04389	PLASTIC;WHEEL;P0AHW;POM (Polyoxymethylene);INJECTION;WHITE;GEAR		
27	1.0000	PC	W53-00001-04591	G53-00001-04591	PLASTIC;CAP;P0BI9;ABS;PRINTING;BLACK MATT;SIDE CHEEK LEFT		
28	1.0000	PC	W53-00001-04594	G53-00001-04594	PLASTIC;CAP;P0BI9;ABS;PRINTING;BLACK MATT;SIDE CHEEK RIGHT		
29	1.0000	PC	W53-00001-04646	G53-00001-04646	PLASTIC;BUTTON;P0BI9;SILICON RUBBER;MOULDING;TRANSPARENT;RUBBER REC3-CIR1 REV.A		

	Quantity	Unit	S.Sku	M.Sku	Description	Reference Designators	Notes
30	1.0000	PC	W53-00001-04651	G53-00001-04651	PLASTIC;BUTTON;P0BI9;SILICON RUBBER;MOULDING;TRANSPARENT;RUBBER REC2-CIR2-H REV.A		
31	1.0000	PC	W53-00001-04654	G53-00001-04654	PLASTIC;BUTTON;P0BI9;SILICON RUBBER;MOULDING;TRANSPARENT;RUBBER REC2-CIR2-V REV.A		
32	1.0000	PC	W53-00001-04657	G53-00001-04657	PLASTIC;BUTTON;P0BI9;SILICON RUBBER;MOULDING;TRANSPARENT;RUBBER REC2-CIR10 REV.A		
33	1.0000	PC	W53-00001-04664	G53-00001-04664	PLASTIC;BUTTON;P0BI9;SILICON RUBBER;MOULDING;TRANSPARENT;RUBBER REC2-CIR1 REV.A		
34	2.0000	PC	W53-00001-04666	G53-00001-04666	PLASTIC;BUTTON;P0BI9;SILICON RUBBER;MOULDING;TRANSPARENT;RUBBER REC6 REV.A		
35	1.0000	PC	W53-00001-04693	G53-00001-04693	PLASTIC;HOUSING;P0BI9;ABS PA757;INJECTION;PAINTING NORMAL;SILVER;HOUSING REC3-CIR1 REV.A		
36	1.0000	PC	W53-00001-04695	G53-00001-04695	PLASTIC;HOUSING;P0BI9;ABS PA757;INJECTION;PAINTING NORMAL;SILVER;HOUSING REC2-CIR2-H REV.A		
37	1.0000	PC	W53-00001-04696	G53-00001-04696	PLASTIC;HOUSING;P0BI9;ABS PA757;INJECTION;PAINTING NORMAL;SILVER;HOUSING REC2-CIR2-V REV.A		
38	1.0000	PC	W53-00001-04697	G53-00001-04697	PLASTIC;HOUSING;P0BI9;ABS PA757;INJECTION;PAINTING NORMAL;SILVER;HOUSING REC2-CIR10 REV.A		
39	1.0000	PC	W53-00001-04698	G53-00001-04698	PLASTIC;HOUSING;P0BI9;ABS PA757;INJECTION;PAINTING NORMAL;SILVER;HOUSING REC2-CIR1 REV.A		
40	2.0000	PC	W53-00001-04699	G53-00001-04699	PLASTIC;HOUSING;P0BI9;ABS PA757;INJECTION;PAINTING NORMAL;SILVER;HOUSING REC6 REV.A		
41	17.0000	PC	W53-00001-04386	G53-00001-17990	PLASTIC;HOLDER;P0AHW;POM (Polyoxymethylene);INJECTION;GEAR HOLDER REV.A		
42	1.0000	PC		G53-00001-24808	PLASTIC;HOLDER;P0B3I;ABS;INJECTION;WHITE;LCD-HOLDER-1-REVC		
43	2.0000	PC		G53-00001-24809	PLASTIC;HOLDER;P0B3I;ABS;INJECTION;WHITE;LCD-HOLDER-8-REVC		
44	4.0000	PC		G53-00001-25411	PLASTIC;BUTTON;P0B3I;SILICON RUBBER;MOULDING;RUBBER REC-1 REV.B		
45	2.0000	PC		G53-00001-25418	PLASTIC;BUTTON;P0B3I;SILICON RUBBER;MOULDING;RUBBER R8 REV.B		
46	1.0000	PC	W53-00000-95756	G53-00001-25421	PLASTIC;BUTTON;P0B3I;SILICON RUBBER;MOULDING;RUBBER R1REC2 REV.B		
47	2.0000	PC		G53-00001-25442	PLASTIC;BUTTON;P0B3I;SILICON RUBBER;MOULDING;OVAL-RUBBER-8 REV.B		
48	1.0000	PC		G53-00001-25445	PLASTIC;BUTTON;P0B3I;SILICON RUBBER;MOULDING;RUBBER-R1 REV.B		
49	2.0000	PC		G53-00001-25446	PLASTIC;BUTTON;P0B3I;SILICON RUBBER;MOULDING;RUBBER-REC-8 REV.B		
50	1.0000	PC		G53-00001-25454	PLASTIC;BUTTON;P0B3I;SILICON RUBBER;MOULDING;RUBBER REC2 REV.B		
51	1.0000	PC	W54-00000-71645	G54-00000-71645	PLASTIC;WINDOW;P0AWQ;PC;INJECTION;MATT;BLACK;WHITE, TRANSLUCENT;P0AWQ-LED HOLDER REVA		
52	17.0000	PC	W58-00000-45211	G58-00000-45211	PLASTIC;P0246;NYLON 66(POLYAMIDE 66);FADER;INJECTION;BLACK;BELT HOLDER REV.D		
53	1.0000	PC	W58-00000-52835	G58-00000-52835	PLASTIC;P0AAQ;ABS (VO);HOLDER;INJECTION;P0AAQ-Ferrite-holder-REVA		
54	1.0000	PC	W58-00001-04449	G58-00001-04449	PLASTIC;RING;P0B3I;ABS;INJECTION;MATT;PAINTING NORMAL;SILVER;M32-USB-RING		
55	17.0000	PC	Y63-00001-03062	I63-00001-03062	PLASTIC;CAP;P0B3I;PC;INJECTION;PAINTING NORMAL;BLACK;TRANSLUCENT;MAIN BUTTON SELECT;A000		
56	9.0000	PC	Y63-00001-03064	I63-00001-03064	PLASTIC;CAP;P0B3I;PC;INJECTION;PAINTING NORMAL;BLACK;TRANSLUCENT;MAIN BUTTON VIEW;A000		
57	17.0000	PC	Y63-00001-03067	I63-00001-03067	PLASTIC;CAP;P0B3I;PC;INJECTION;PAINTING NORMAL;BLACK;TRANSLUCENT;MAIN BUTTON SOLO;A000		
58	1.0000	PC	Y63-00001-03069	I63-00001-03069	PLASTIC;CAP;P0B3I;PC;INJECTION;PAINTING NORMAL;BLACK;TRANSLUCENT;MAIN BUTTON CLRSOLO;A000		

	Quantity	Unit	S.Sku	M.Sku	Description	Reference Designators	Notes
59	17.0000	PC	Y63-00001-03081	I63-00001-03081	PLASTIC;CAP;P0B3I;PC;INJECTION;PAINTING NORMAL;BLACK;TRANSLUCENT;MAIN BUTTON MUTE;A000		
60	1.0000	PC	Y63-00001-03083	I63-00001-03083	PLASTIC;CAP;P0B3I;PC;INJECTION;PAINTING NORMAL;BLACK;TRANSLUCENT;MAIN BUTTON 48V;A000		
61	1.0000	PC	Y63-00001-03085	I63-00001-03085	PLASTIC;CAP;P0B3I;PC;INJECTION;PAINTING NORMAL;BLACK;TRANSLUCENT;MAIN BUTTON REMOTE;A000		
62	1.0000	PC	Y63-00001-03087	I63-00001-03087	PLASTIC;CAP;P0B3I;PC;INJECTION;PAINTING NORMAL;BLACK;TRANSLUCENT;MAIN BUTTON FADERFLIP;A000		
63	1.0000	PC	Y63-00001-03089	I63-00001-03089	PLASTIC;CAP;P0B3I;PC;INJECTION;PAINTING NORMAL;BLACK;TRANSLUCENT;MAIN BUTTON PHASEFLIP;A000		
64	1.0000	PC	Y63-00001-03091	I63-00001-03091	PLASTIC;CAP;P0B3I;PC;INJECTION;PAINTING NORMAL;BLACK;TRANSLUCENT;MAIN BUTTON MODE;A000		
65	1.0000	PC	Y63-00001-03093	I63-00001-03093	PLASTIC;CAP;P0B3I;PC;INJECTION;PAINTING NORMAL;BLACK;TRANSLUCENT;MAIN BUTTON EQ;A000		
66	1.0000	PC	Y63-00001-03095	I63-00001-03095	PLASTIC;CAP;P0B3I;PC;INJECTION;PAINTING NORMAL;BLACK;TRANSLUCENT;MAIN BUTTON HIGH;A000		
67	1.0000	PC	Y63-00001-03097	I63-00001-03097	PLASTIC;CAP;P0B3I;PC;INJECTION;PAINTING NORMAL;BLACK;TRANSLUCENT;MAIN BUTTON HI MID;A000		
68	1.0000	PC	Y63-00001-03099	I63-00001-03099	PLASTIC;CAP;P0B3I;PC;INJECTION;PAINTING NORMAL;BLACK;TRANSLUCENT;MAIN BUTTON LO MID;A000		
69	1.0000	PC	Y63-00001-03102	I63-00001-03102	PLASTIC;CAP;P0B3I;PC;INJECTION;PAINTING NORMAL;BLACK;TRANSLUCENT;MAIN BUTTON LOW;A000		
70	1.0000	PC	Y63-00001-03114	I63-00001-03114	PLASTIC;CAP;P0B3I;PC;INJECTION;PAINTING NORMAL;BLACK;TRANSLUCENT;MAIN BUTTON MONOCENTER;A000		
71	1.0000	PC	Y63-00001-03117	I63-00001-03117	PLASTIC;CAP;P0B3I;PC;INJECTION;PAINTING NORMAL;BLACK;TRANSLUCENT;MAIN BUTTON MAINSTEREO;A000		
72	1.0000	PC	Y63-00001-03121	I63-00001-03121	PLASTIC;CAP;P0B3I;PC;INJECTION;PAINTING NORMAL;BLACK;TRANSLUCENT;MAIN BUTTON DIM;A000		
73	1.0000	PC	Y63-00001-03124	I63-00001-03124	PLASTIC;CAP;P0B3I;PC;INJECTION;PAINTING NORMAL;BLACK;TRANSLUCENT;MAIN BUTTON TALKA;A000		
74	1.0000	PC	Y63-00001-03126	I63-00001-03126	PLASTIC;CAP;P0B3I;PC;INJECTION;PAINTING NORMAL;BLACK;TRANSLUCENT;MAIN BUTTON TALKB;A000		
75	1.0000	PC	Y63-00001-03138	I63-00001-03138	PLASTIC;CAP;P0B3I;PC;INJECTION;PAINTING NORMAL;BLACK;TRANSLUCENT;MAIN BUTTON GATE;A000		
76	1.0000	PC	Y63-00001-03140	I63-00001-03140	PLASTIC;CAP;P0B3I;PC;INJECTION;PAINTING NORMAL;BLACK;TRANSLUCENT;MAIN BUTTON COMP;A000		
77	1.0000	PC	Y63-00001-03142	I63-00001-03142	PLASTIC;CAP;P0B3I;PC;INJECTION;PAINTING NORMAL;BLACK;TRANSLUCENT;MAIN BUTTON LOWCUT;A000		
78	1.0000	PC	Y63-00001-03150	I63-00001-03150	PLASTIC;CAP;P0B3I;PC;INJECTION;PAINTING NORMAL;BLACK;TRANSLUCENT;MAIN BUTTON AUXINUSB;A000		
79	1.0000	PC	Y63-00001-03156	I63-00001-03156	PLASTIC;CAP;P0B3I;PC;INJECTION;PAINTING NORMAL;BLACK;TRANSLUCENT;MAIN BUTTON GROUPDCA 1-8;A000		
80	2.0000	PC	Y63-00001-03158	I63-00001-03158	PLASTIC;CAP;P0B3I;PC;INJECTION;PAINTING NORMAL;BLACK;TRANSLUCENT;MAIN BUTTON BUS 1-8;A000		
81	2.0000	PC	Y63-00001-03160	I63-00001-03160	PLASTIC;CAP;P0B3I;PC;INJECTION;PAINTING NORMAL;BLACK;TRANSLUCENT;MAIN BUTTON BUS 9-16;A000		
82	1.0000	PC	Y63-00001-07080	I63-00001-07080	PLASTIC;CAP;P0BI9;PC;INJECTION;PAINTING NORMAL;BLACK;TRANSLUCENT;MAIN BUTTON;ROUND;1;A000		
83	1.0000	PC	Y63-00001-07090	I63-00001-07090	PLASTIC;CAP;P0BI9;PC;INJECTION;PAINTING NORMAL;BLACK;TRANSLUCENT;MAIN BUTTON;ROUND;2;A001		
84	1.0000	PC	Y63-00001-07093	I63-00001-07093	PLASTIC;CAP;P0BI9;PC;INJECTION;PAINTING NORMAL;BLACK;TRANSLUCENT;MAIN BUTTON;ROUND;3;A001		
85	1.0000	PC	Y63-00001-07095	I63-00001-07095	PLASTIC;CAP;P0BI9;PC;INJECTION;PAINTING NORMAL;BLACK;TRANSLUCENT;MAIN BUTTON;ROUND;4;A001		
86	1.0000	PC	Y63-00001-07097	I63-00001-07097	PLASTIC;CAP;P0BI9;PC;INJECTION;PAINTING NORMAL;BLACK;TRANSLUCENT;MAIN BUTTON;ROUND;5;A001		

	Quantity	Unit	S.Sku	M.Sku	Description	Reference Designators	Notes
87	1.0000	PC	Y63-00001-07099	I63-00001-07099	PLASTIC;CAP;P0BI9;PC;INJECTION;PAINTING NORMAL;BLACK;TRANSLUCENT;MAIN BUTTON;ROUND;6;A001		
88	1.0000	PC	Y63-00001-07101	I63-00001-07101	PLASTIC;CAP;P0BI9;PC;INJECTION;PAINTING NORMAL;BLACK;TRANSLUCENT;MAIN BUTTON;ROUND;7;A001		
89	1.0000	PC	Y63-00001-07103	I63-00001-07103	PLASTIC;CAP;P0BI9;PC;INJECTION;PAINTING NORMAL;BLACK;TRANSLUCENT;MAIN BUTTON;ROUND;8;A001		
90	1.0000	PC	Y63-00001-07105	I63-00001-07105	PLASTIC;CAP;P0BI9;PC;INJECTION;PAINTING NORMAL;BLACK;TRANSLUCENT;MAIN BUTTON;REC;INPUTS 1-8;A001		
91	1.0000	PC	Y63-00001-07107	I63-00001-07107	PLASTIC;CAP;P0BI9;PC;INJECTION;PAINTING NORMAL;BLACK;TRANSLUCENT;MAIN BUTTON;REC;INPUTS 9-16;A001		
92	1.0000	PC	Y63-00001-07109	I63-00001-07109	PLASTIC;CAP;P0BI9;PC;INJECTION;PAINTING NORMAL;BLACK;TRANSLUCENT;MAIN BUTTON;REC;INPUTS 17-24;A001		
93	1.0000	PC	Y63-00001-07111	I63-00001-07111	PLASTIC;CAP;P0BI9;PC;INJECTION;PAINTING NORMAL;BLACK;TRANSLUCENT;MAIN BUTTON;REC;INPUTS 25-32;A001		
94	1.0000	PC	Y63-00001-07113	I63-00001-07113	PLASTIC;CAP;P0BI9;PC;INJECTION;PAINTING NORMAL;BLACK;TRANSLUCENT;MAIN BUTTON;REC;FXRET;A001		
95	1.0000	PC	Y63-00001-07115	I63-00001-07115	PLASTIC;CAP;P0BI9;PC;INJECTION;PAINTING NORMAL;BLACK;TRANSLUCENT;MAIN BUTTON;REC;MATRIXMAINC;A001		
96	17.0000	PC	Y63-00001-18501	I63-00001-18501	PLASTIC;CAP;P0B3I;ABS + PC;P0B3I FADER CAP, REVB		
97	1.0000	PC	Y63-00001-19398	I63-00001-19398	PLASTIC;HOUSING;P0BI9;ABS;INJECTION;MATTE;PAINTING NORMAL;BLACK;DISPLAY HOUSING;A001		
98	1.0000	PC	Y64-00000-72499	I64-00000-72499	PLASTIC;WINDOW;P0AWN;PC;CUTTING;WHITE, TRANSLUCENT;X32;BEZEL;DISPLAY OVERLAY;A001		
99	1.0000	PC	Y64-00000-72744	I64-00000-72744	PLASTIC;BUTTON;P0000;PC;INJECTION;PAINTING NORMAL;BLACK;WHITE, TRANSLUCENT;X32;BEZEL;HOME;A000		
100	1.0000	PC	Y64-00000-72750	I64-00000-72750	PLASTIC;BUTTON;P0000;PC;INJECTION;PAINTING NORMAL;BLACK;WHITE, TRANSLUCENT;X32;BEZEL;METERS;A000		
101	1.0000	PC	Y64-00000-72756	I64-00000-72756	PLASTIC;BUTTON;P0000;PC;INJECTION;PAINTING NORMAL;BLACK;WHITE, TRANSLUCENT;X32;BEZEL;ROUTING;A000		
102	1.0000	PC	Y64-00000-72760	I64-00000-72760	PLASTIC;BUTTON;P0000;PC;INJECTION;PAINTING NORMAL;BLACK;WHITE, TRANSLUCENT;X32;BEZEL;LIBRARY;A000		
103	1.0000	PC	Y64-00000-72764	I64-00000-72764	PLASTIC;BUTTON;P0000;PC;INJECTION;PAINTING NORMAL;BLACK;WHITE, TRANSLUCENT;X32;BEZEL;EFFECTS;A000		
104	1.0000	PC	Y64-00000-72770	I64-00000-72770	PLASTIC;BUTTON;P0000;PC;INJECTION;PAINTING NORMAL;BLACK;WHITE, TRANSLUCENT;X32;BEZEL;SETUP;A000		
105	1.0000	PC	Y64-00000-72773	I64-00000-72773	PLASTIC;BUTTON;P0000;PC;INJECTION;PAINTING NORMAL;BLACK;WHITE, TRANSLUCENT;X32;BEZEL;MONITOR;A000		
106	1.0000	PC	Y64-00000-72776	I64-00000-72776	PLASTIC;BUTTON;P0000;PC;INJECTION;PAINTING NORMAL;BLACK;WHITE, TRANSLUCENT;X32;BEZEL;SCENES;A000		
107	1.0000	PC	Y64-00000-72778	I64-00000-72778	PLASTIC;BUTTON;P0000;PC;INJECTION;PAINTING NORMAL;BLACK;WHITE, TRANSLUCENT;X32;BEZEL;MUTEGRP;A000		
108	1.0000	PC	Y64-00000-72780	I64-00000-72780	PLASTIC;BUTTON;P0000;PC;INJECTION;PAINTING NORMAL;BLACK;WHITE, TRANSLUCENT;X32;BEZEL;UTILITY;A000		
109	2.0000	PC	Y64-00000-72785	I64-00000-72785	PLASTIC;BUTTON;P0000;PC;INJECTION;PAINTING NORMAL;BLACK;WHITE, TRANSLUCENT;WHITE;X32;BEZEL;NAVBUTTON;UPDOWN;A000		
110	2.0000	PC	Y64-00000-72788	I64-00000-72788	PLASTIC;BUTTON;P0000;PC;INJECTION;PAINTING NORMAL;BLACK;WHITE, TRANSLUCENT;X32;BEZEL;NAVBUTTON;LEFTRIGHT;A000		
111	1.0000	PC		I64-00001-31025	PLASTIC;LENS;P0B3I;PMMA;CUTTING / MACHINING;LENS1;REVB		
112	2.0000	PC		I64-00001-31029	PLASTIC;LENS;P0B3I;PMMA;CUTTING / MACHINING;LENS8;REVB		

Plug Socket

	Quantity	Unit	S.Sku	M.Sku	Description	Reference Designators	Notes
1	1.0000	PC	W61-00000-11677	G61-00000-11677	BOX HEAD;14;ROWS:2;STRAIGHT;2 MM;87831-1420	[P0BI9:9: {1.0}(X3)]	
2	15.0000	PC	W64-01211-03174	G64-01211-03174	PLUG;JACK STEREO 6mm3;STRAIGHT SOLDER;W/O MET.RNG.;MET.BUSH.;NO NUT/WASHER;(JY-6351G-02-250)	[P0BI9:6: {14.0}(X1-X7,X10-X16)]	
3	1.0000	PC	W67-00000-69881	G67-00000-69881	SOCKET;HOUSING;3;WITH SWITCH;33MM6X30		
4	1.0000	PC	W68-34004-17323	G68-34004-17323	PLUG;RCA;SOCKET;RCAJACK4P/S;FEMALE;POLES:04;STRAIGHT	[P0BI9:6: {1.0}(X9)]	
5	17.0000	PC	W71-00000-17262	G71-00000-17262	WAFER;PCB WAFER;6;ROWS:1;STRAIGHT;2.54 MM;640456-6	[P0BI9:4: {9.0}(X10-X18)]	
6	2.0000	PC	W71-00000-18295	G71-00000-18295	PCB SOCKET;PIN SOCKET;HOUSING;24;ROWS:2;ANGLED;2 MM;SMD	[P0BI9:5: {2.0}(X9,X13)]	
7	2.0000	PC	W71-00000-18297	G71-00000-18297	PCB SOCKET;PIN SOCKET;HOUSING;32;ROWS:2;ANGLED;2 MM;SMD	[P0BI9:5: {2.0}(X8,X12)]	
8	2.0000	PC	W71-00000-18401	G71-00000-18401	PIN HEAD;24;ROWS:2;ANGLED;2 MM;DUAL SMD PIN HEADER	[P0B3I:16: {2.0}(X3,X5)]	
9	2.0000	PC	W71-00000-18402	G71-00000-18402	PIN HEAD;32;ROWS:2;ANGLED;2 MM;DUAL SMD PIN HEADER	[P0B3I:16: {2.0}(X4,X6)]	
10	1.0000	PC	W71-00000-25923	G71-00000-25923	WAFER;PCB WAFER;2;ROWS:1;ANGLED;7.92 MM;JS1120	[P0BI9:10: {1.0}(X2)]	
11	2.0000	PC	W71-23103-04757	G71-23103-04757	WAFER;POLES:3;STRAIGHT;PITCH:2 mm;1 ROW;TYPE:A2006WV-3P	[P0BI9:5: {1.0}(X7)]	
12	2.0000	PC	W71-23104-04758	G71-23104-04758	WAFER;POLES:4;STRAIGHT;PITCH:2 mm;1 ROW;TYPE:A2006WV-4P	[P0BI9:4: {1.0}(X20)]	
13	1.0000	PC	W71-23105-04745	G71-23105-04745	WAFER;POLES:5;STRAIGHT;PITCH:2 mm;1 ROW;TYPE:A2006WV-5P	[P0BI9:5: {1.0}(X21)]	
14	2.0000	PC	W71-23106-04965	G71-23106-04965	WAFER;POLES:6;STRAIGHT;PITCH:2 mm;1 ROW;TYPE:A2006WV-6P	[P0BI9:6: {1.0}(X18)]	
15	1.0000	PC	W71-23107-04746	G71-23107-04746	WAFER;POLES:7;STRAIGHT;PITCH:2 mm;1 ROW;TYPE:A2006WV-7P	[P0BI9:5: {1.0}(X20)]	
16	1.0000	PC	W71-23108-04747	G71-23108-04747	WAFER;POLES:8;STRAIGHT;PITCH:2 mm;1 ROW;TYPE:A2006WV-8P	[P0BI9:4: {1.0}(X21)]	
17	2.0000	PC	W71-23110-04749	G71-23110-04749	WAFER;POLES:10;STRAIGHT;PITCH:2 mm;1 ROW;TYPE:A2006WV-10P	[P0BI9:5: {1.0}(X22)]	
18	3.0000	PC	W71-23112-04751	G71-23112-04751	WAFER;POLES:12;STRAIGHT;PITCH:2 mm;1 ROW;TYPE:A2006WV-12P	[P0BI9:10: {3.0}(X4-X6)]	
19	1.0000	PC	W71-23113-04752	G71-23113-04752	WAFER;POLES:13;STRAIGHT;PITCH:2 mm;1 ROW;TYPE:A2006WV-13P	[P0BI9:2: {1.0}(X8)]	
20	1.0000	PC	W71-27102-04450	G71-27102-04450	WAFER;POLES:2;STRAIGHT;PITCH:3.96 mm;1 ROW;JS1120-03-S1;NO MIDDLE PIN	[P0B3I:2: {1.0}(X1)]	
21	1.0000	PC	W71-27107-04763	G71-27107-04763	WAFER;POLES:7;STRAIGHT;PITCH:3.96 mm;1 ROW;JS1120-07	[P0BI9:10: {1.0}(X1)]	
22	1.0000	PC	W71-43103-05995	G71-43103-05995	PLUG;HOUSING;POLES:3;ROWS:1;STRAIGHT;PITCH:2mm;TYP:A2008		
23	2.0000	PC	W71-43104-05996	G71-43104-05996	PLUG;HOUSING;POLES:4;ROWS:1;STRAIGHT;PITCH:2mm;TYP:A2008		
24	1.0000	PC	W71-43105-05997	G71-43105-05997	PLUG;HOUSING;POLES:5;ROWS:1;STRAIGHT;PITCH:2mm;TYP:A2008		
25	2.0000	PC	W71-43106-05998	G71-43106-05998	PLUG;HOUSING;POLES:6;ROWS:1;STRAIGHT;PITCH:2mm;TYP:A2008		
26	1.0000	PC	W71-43107-05999	G71-43107-05999	PLUG;HOUSING;POLES:7;ROWS:1;STRAIGHT;PITCH:2mm;TYP:A2008		
27	1.0000	PC	W71-43108-06000	G71-43108-06000	PLUG;HOUSING;POLES:8;ROWS:1;STRAIGHT;PITCH:2mm;TYP:A2008		
28	2.0000	PC	W71-43110-06002	G71-43110-06002	PLUG;HOUSING;POLES:10;ROWS:1;STRAIGHT;PITCH:2mm;TYP:A2008		
29	3.0000	PC	W71-43112-06004	G71-43112-06004	PLUG;HOUSING;POLES:12;ROWS:1;STRAIGHT;PITCH:2mm;TYP:A2008		
30	1.0000	PC	W71-43113-06005	G71-43113-06005	PLUG;HOUSING;POLES:13;ROWS:1;STRAIGHT;PITCH:2mm;TYP:A2008		
31	2.0000	PC	W71-47103-05845	G71-47103-05845	PLUG;HOUSING;A3963H02;PITCH:3mm96;POLES:3;ROWS:1;UL94-V0;STRAIGHT		
32	1.0000	PC	W71-47103-06756	G71-47103-06756	PLUG;HOUSING;P:3mm96;STRAIGHT;ROWS:1;POLES:3;TYP:JS4008		
33	1.0000	PC	W71-47107-06748	G71-47107-06748	PLUG;HOUSING;A3963H02;PITCH:3mm96;POLES:7;ROWS:1;UL94-V0;STRAIGHT		
34	1.0000	PC	W71-47107-06760	G71-47107-06760	PLUG;HOUSING;P:3mm96;STRAIGHT;ROWS:1;POLES:7;TYP:JS4008		
35	109.0000	PC	W71-80000-05663	G71-80000-05663	BD.-IN-CONN;TERMINAL;SAN-002T-0.8A		
36	1.0000	PC	W71-83103-05643	G71-83103-05643	BOARD-IN-CONNECTOR;POLES:3;ROWS:1;STRAIGHT;PITCH:2 mm		
37	3.0000	PC	W71-83104-05644	G71-83104-05644	BOARD-IN-CONNECTOR;POLES:4;ROWS:1;STRAIGHT;PITCH:2 mm		
38	1.0000	PC	W71-83105-05647	G71-83105-05647	BOARD-IN-CONNECTOR;POLES:5;ROWS:1;STRAIGHT;PITCH:2 mm		
39	2.0000	PC	W71-83106-05650	G71-83106-05650	BOARD-IN-CONNECTOR;POLES:6;ROWS:1;STRAIGHT;PITCH:2 mm		
40	1.0000	PC	W71-83108-05652	G71-83108-05652	BOARD-IN-CONNECTOR;POLES:8;ROWS:1;STRAIGHT;PITCH:2 mm		
41	2.0000	PC	W71-83110-05654	G71-83110-05654	BOARD-IN-CONNECTOR;POLES:10;ROWS:1;STRAIGHT;PITCH:2 mm		
42	3.0000	PC	W71-83112-05657	G71-83112-05657	BOARD-IN-CONNECTOR;POLES:12;ROWS:1;STRAIGHT;PITCH:2 mm		
43	1.0000	PC	W71-83113-05818	G71-83113-05818	BOARD-IN-CONNECTOR;POLES:13;ROWS:1;STRAIGHT;PITCH:2 mm		

	Quantity	Unit	S.Sku	M.Sku	Description	Reference Designators	Notes
44	1.0000	PC	W76-00000-18427	G76-00000-18427	PLUG;DIN;RJ45;8;2.54 MM;RJ45-112-8P8C-EP	[P0BI9:5: {1.0}(X1)]	
45	2.0000	PC	W76-10580-03132	G76-10580-03132	PLUG;DIN;PLUG;FEMALE;POLES:5;ANGLED	[P0BI9:5: {2.0}(X2-X3)]	
46	1.0000	PC	W66-00000-52386	G66-00000-52386	PLUG:AC SOCK;3;JAPANESE ADAPTOR PLUG - JIS8030		(JP, JPMG)

Power Supply

	Quantity	Unit	S.Sku	M.Sku	Description	Reference Designators	Notes
1	1.0000	PC	W83-02153-01037	G83-02153-01037	BUTTON-CELL;CAPACITY;215mAh;3V;SPEC.NO:01037;(CR2032)	[P0BI9:5: {1.0}(BAT1)]	
2	1.0000	PC	Z63-00000-80697	J63-00000-80697	TRANSFORMER;P0AWQ;12;EC3542 L(3-1):400uH+/-10%@1KHz,0.25v.SG	[P0BI9:10: {1.0}(TR1)]	
3	1.0000	PC	Z63-00000-80699	J63-00000-80699	TRANSFORMER;P0AWQ;10;EC2834 L(3-1):560uH+/-10%@1KHz,0.25v SG	[P0BI9:10: {1.0}(TR2)]	
4	2.0000	PC	Z66-00000-12096	J66-00000-12096	TRAFO:PULSE;P0ACI;VoIP MAGNETIC MODULE;H2006ANL;SMD	[P0BI9:5: {2.0}(TR1-TR2)]	

Quarz

	Quantity	Unit	S.Sku	M.Sku	Description	Reference Designators	Notes
1	4.0000	PC	X64-00000-15597	H64-00000-15597	QUARZ;OSCILLATOR;8MHz;8pF;SIZE:5X3.2mm;50ppm;SMD	[P0BIF:00: {1.0}(Q2)]	
2	1.0000	PC	X64-00000-18819	H64-00000-18819	QUARZ;OSCILLATOR;16 MHz;SMD;3.3V;50PPM;SIZE:7X5X1.5	[P0BI9:5: {1.0}(Q1)]	
3	1.0000	PC	X64-00000-29819	H64-00000-29819	QUARZ;OSCILLATOR;25 MHz;8pF;5X3MM2;SMD	[P0B3I:16: {1.0}(Q2)]	
4	1.0000	PC	X64-00000-78019	H64-00000-78019	QUARZ;OSCILLATOR;13 MHz;SMD;3.3V;SIZE:7X5X1.5	[P0BIF:00: {1.0}(Q3)]	
5	3.0000	PC	X65-00000-17608	H65-00000-17608	QUARZ;RESONATOR;12 MHz;8pF;SMD;SIZE:5X3MM2;50ppm	[P0BI9:4: {1.0}(Q1)]	
6	1.0000	PC	X65-00000-36991	H65-00000-36991	QUARZ;RESONATOR;24 MHz;8pF;SMD;SIZE:5X3.2	[P0B3I:16: {1.0}(Q4)]	
7	2.0000	PC	X65-00000-38720	H65-00000-38720	QUARZ;RESONATOR;32.768 kHz;SMD;3.2*1.5	[P0B3I:16: {2.0}(Q1,Q3)]	

Resistor

	Quantity	Unit	S.Sku	M.Sku	Description	Reference Designators	Notes
1	64.0000	PC			RESISTOR;METAL;1 kohm;0.20W;1 %;50 PPM;SMD0102;MELF	[P0BI9:1: {32.0}(R402-R403,R406-R407,R410-R411,R414-R415,R418-R419,R422-R423,R426-R427,R430-R431,R435-R436,R439-R440,R443-R444,R447-R448,R451-R452,R455-R456,R459-R460,R463-R464)]	*NOT available in DP
2	32.0000	PC			RESISTOR;CARBON;10 ohm;1W;5 %;200 PPM;SMD2512;THICK FILM	[P0BI9:1: {16.0}(R521-R536)]	*NOT available in DP
3	18.0000	PC			RESISTOR;CARBON;10 kohm;0W125;1 %;100 PPM;SMD805;THICK FILM	[P0BI9:1: {9.0}(R21,R469-R476)]	*NOT available in DP
4	16.0000	PC			RESISTOR;METAL;110 ohm;0W100;1 %;100 PPM;SMD603;MET	[P0BI9:1: {8.0}(R168,R170,R172,R174,R176,R178,R180,R183)]	*NOT available in DP
5	32.0000	PC			RESISTOR;METAL;330 ohm;0W100;1 %;100 PPM;SMD603;MET	[P0B3I:2: {32.0}(R57,R60-R61,R64-R65,R68-R69,R72-R81,R83-R86,R88-R91,R93-R96,R98-R100)]	*NOT available in DP
6	16.0000	PC			RESISTOR;METAL;1.8 kohm;0W100;1 %;100 PPM;SMD603;MET	[P0B3I:2: {16.0}(R161-R164,R166,R169,R172,R175,R177-R184)]	*NOT available in DP
7	16.0000	PC			RESISTOR;METAL;3.9 kohm;0W100;1 %;100 PPM;SMD603;MET	[P0B3I:2: {16.0}(R101,R103,R105,R107,R110,R114,R118,R122,R138-R139,R142-R143,R146-R147,R150-R151)]	*NOT available in DP
8	16.0000	PC			RESISTOR;METAL;100 kohm;0W100;1 %;100 PPM;SMD603;MET	[P0B3I:2: {16.0}(R49-R56,R125,R127-R128,R130-R131,R133-R134,R136)]	*NOT available in DP
9	32.0000	PC			RESISTOR;METAL;130 ohm;0W100;1 %;100 PPM;SMD603;MET	[P0BI9:1: {16.0}(R87-R89,R91,R93,R95-R97,R99,R101,R103-R106,R108,R110)]	*NOT available in DP
10	82.0000	PC			RESISTOR;METAL;100 ohm;0W100;1 %;100 PPM;SMD603;MET	[P0BI9:5: {24.0}(R10-R11,R17-R18,R38-R39,R42-R43,R46-R47,R50-R51,R218-R219,R224-R225,R237-R238,R241-R242,R247-R248,R251-R252)]	*NOT available in DP
11	32.0000	PC			RESISTOR;METAL;2.2 kohm;0.1 %;15 PPM;MELF;0204;0.25W;SMD	[P0BI9:1: {16.0}(R345-R356,R362,R373,R384,R400)]	*NOT available in DP
12	16.0000	PC			RESISTOR;METAL;15 ohm;0W100;1 %;100 PPM;SMD603;MET	[P0BI9:1: {8.0}(R135,R138,R141,R144,R147,R151,R153,R181)]	*NOT available in DP
13	1.0000	PC			RESISTOR;METAL;23.7 kohm;0W100;1 %;SMD805;MET	[P0BI9:10: {1.0}(R44)]	*NOT available in DP
14	32.0000	PC			RESISTOR;METAL;62 ohm;0W100;1 %;100 PPM;SMD603;MET	[P0BI9:1: {16.0}(R165,R171,R173,R175,R177,R179,R182,R184-R192)]	*NOT available in DP
15	6.0000	PC			RESISTOR;CARBON;4.7 kohm;0.0625 W;5 %;100 ppm;SMD402	[P0B3I:16: {6.0}(R59-R60,R63-R66)]	*NOT available in DP
16	16.0000	PC			RESISTOR;METAL;11 ohm;0W0625;1 %;200 PPM;SMD603;THICK FILM	[P0BI9:1: {8.0}(R149,R155,R157,R159,R161,R163,R167,R169)]	*NOT available in DP
17	16.0000	PC			RESISTOR;METAL;27 ohm;0W0625;1 %;200 PPM;SMD603;THICK FILM	[P0BI9:1: {8.0}(R130,R133,R136,R139,R142,R145,R148,R150)]	*NOT available in DP
18	34.0000	PC			RESISTOR;THICK FILM;6K8 ohm; 1%;SMD1210	[P0BI9:1: {16.0}(R477,R498,R500-R501,R503-R504,R506-R507,R509-R510,R512-R513,R515-R516,R518-R519)]	*NOT available in DP
19	32.0000	PC			RESISTOR;METAL;1.1 kohm;0.1 %;MELF;METAL OXIDE FILM;3.8 MM;0204;0.25W;SMD	[P0BI9:1: {16.0}(R274,R276,R278,R280,R282,R284,R286,R288-R289,R293,R297,R301,R305-R308)]	*NOT available in DP
20	1.0000	PC			RESISTOR;METAL;45.3 kohm;0W25;1 %;SMD1206;THICK FILM	[P0BI9:10: {1.0}(R73)]	*NOT available in DP
21	17.0000	PC			RESISTOR;CARBON;180ohm;5%;0W063;SMD603	[P0BI9:4: {9.0}(R84-R92)]	*NOT available in DP
22	10.0000	PC			RESISTOR;CARBON;0ohm;5%;0W063;SMD603	[P0BI9:5: {6.0}(R193,R195,R292,R304,R307-R308)]	*NOT available in DP
23	1.0000	PC			RESISTOR;CARBON;2ohm2;5%;0W063;SMD603	[P0BIF:00: {1.0}(R224)]	*NOT available in DP
24	4.0000	PC			RESISTOR;CARBON;10ohm;5%;0W063;SMD603	[P0BI9:5: {2.0}(R183,R188)]	*NOT available in DP
25	29.0000	PC			RESISTOR;CARBON;33ohm;5%;0W063;SMD603	[P0BIF:00: {23.0}(R3,R5-R11,R17-R20,R23-R26,R31-R34,R42,R46-R47)]	*NOT available in DP
26	19.0000	PC			RESISTOR;CARBON;47ohm;5%;0W063;SMD603	[P0BI9:5: {11.0}(R21,R129,R137,R140,R152,R155,R169,R191-R192,R197-R198)]	*NOT available in DP
27	95.0000	PC			RESISTOR;CARBON;100ohm;5%;0W063;SMD603	[P0BIF:00: {1.0}(R62)]	*NOT available in DP
28	26.0000	PC			RESISTOR;CARBON;200ohm;5%;0W063;SMD603	[P0BI9:4: {9.0}(R129,R170-R176,R190)]	*NOT available in DP
29	463.0000	PC			RESISTOR;CARBON;330ohm;5%;0W063;SMD603	[P0BI9:5: {4.0}(R53,R151,R199-R200)]	*NOT available in DP
30	22.0000	PC			RESISTOR;CARBON;1Kohm;5%;0W063;SMD603	[P0BIF:00: {4.0}(R21-R22,R35,R221)]	*NOT available in DP

	Quantity	Unit	S.Sku	M.Sku	Description	Reference Designators	Notes
31	1.0000	PC			RESISTOR;CARBON;1Kohm2;5%;0W063;SMD603	[P0BI9:2: {1.0}(R370)]	*NOT available in DP
32	120.0000	PC			RESISTOR;CARBON;2Kohm;5%;0W063;SMD603	[P0BI9:4: {37.0}(R28,R35-R36,R38-R43,R46-R55,R102-R110,R119,R177-R183,R201)]	*NOT available in DP
33	38.0000	PC			RESISTOR;CARBON;2Kohm2;5%;0W063;SMD603	[P0BIF:00: {1.0}(R27)]	*NOT available in DP
34	16.0000	PC			RESISTOR;CARBON;3Kohm9;5%;0W063;SMD603	[P0BI9:1: {8.0}(R499,R502,R505,R508,R511,R514,R517,R520)]	*NOT available in DP
35	75.0000	PC			RESISTOR;CARBON;4Kohm7;5%;0W063;SMD603	[P0BIF:00: {1.0}(R71)]	*NOT available in DP
36	1.0000	PC			RESISTOR;CARBON;6Kohm8;5%;0W063;SMD603	[P0BIF:00: {1.0}(R79)]	*NOT available in DP
37	252.0000	PC			RESISTOR;CARBON;10Kohm;5%;0W063;SMD603	[P0BIF:00: {7.0}(R16,R30,R41,R43-R44,R58,R223)]	*NOT available in DP
38	1.0000	PC			RESISTOR;CARBON;18Kohm;5%;0W063;SMD603	[P0BI9:2: {1.0}(R334)]	*NOT available in DP
39	8.0000	PC			RESISTOR;CARBON;20Kohm;5%;0W063;SMD603	[P0B3I:2: {8.0}(R210,R212,R214,R216,R218,R220,R222,R224)]	*NOT available in DP
40	1.0000	PC			RESISTOR;CARBON;22Kohm;5%;0W063;SMD603	[P0BI9:5: {1.0}(R214)]	*NOT available in DP
41	1.0000	PC			RESISTOR;CARBON;27Kohm;5%;0W063;SMD603	[P0BI9:5: {1.0}(R209)]	*NOT available in DP
42	21.0000	PC			RESISTOR;CARBON;47Kohm;5%;0W063;SMD603	[P0BIF:00: {1.0}(R60)]	*NOT available in DP
43	1.0000	PC			RESISTOR;CARBON;82Kohm;5%;0W063;SMD603	[P0BI9:2: {1.0}(R345)]	*NOT available in DP
44	134.0000	PC			RESISTOR;CARBON;100Kohm;5%;0W063;SMD603	[P0BI9:1: {64.0}(R32-R62,R71,R73,R75,R77,R79,R81,R83,R85,R90,R92,R94,R98,R100,R102,R107,R109,R111-R113,R115,R117,R119,R121,R126,R128-R129,R131-R132,R134,R137,R140,R143,R146)]	*NOT available in DP
45	2.0000	PC			RESISTOR;CARBON;150Kohm;5%;0W063;SMD603	[P0BI9:4: {1.0}(R221)]	*NOT available in DP
46	3.0000	PC			RESISTOR;METAL;0ohm;5%;0W063;SMD603	[P0BI9:4: {2.0}(R1-R2)]	*NOT available in DP
47	2.0000	PC			RESISTOR;METAL;10ohm;1%;0W063;SMD603	[P0B3I:16: {2.0}(R52,R54)]	*NOT available in DP
48	16.0000	PC			RESISTOR;METAL;33ohm;1%;0W063;SMD603	[P0BI9:1: {8.0}(R114,R116,R118,R120,R122-R124,R127)]	*NOT available in DP
49	16.0000	PC			RESISTOR;METAL;51ohm;1%;0W063;SMD603	[P0BI9:1: {8.0}(R257,R259,R261,R263,R265,R267,R269,R271)]	*NOT available in DP
50	4.0000	PC			RESISTOR;METAL;51ohm1;1%;METAL;0W063;SMD603	[P0B3I:16: {4.0}(R47,R50,R53,R56)]	*NOT available in DP
51	48.0000	PC			RESISTOR;METAL;120ohm;1%;0W063;SMD603	[P0BI9:1: {24.0}(R152,R154,R156,R158,R160,R162,R164,R166,R193-R196,R198,R206,R214,R222,R235,R242,R249,R256,R292,R296,R300,R304)]	*NOT available in DP
52	1.0000	PC			RESISTOR;METAL;200ohm;1%;0W063;SMD603	[P0BIF:00: {1.0}(R70)]	*NOT available in DP
53	1.0000	PC			RESISTOR;METAL;332ohm;1%;0W063;SMD603	[P0BIF:00: {1.0}(R69)]	*NOT available in DP
54	16.0000	PC			RESISTOR;METAL;390ohm;1%;0W063;SMD603	[P0BI9:1: {8.0}(R72,R74,R76,R78,R80,R82,R84,R86)]	*NOT available in DP
55	16.0000	PC			RESISTOR;METAL;470ohm;1%;0W063;SMD603	[P0BI9:1: {8.0}(R63-R70)]	*NOT available in DP
56	6.0000	PC			RESISTOR;METAL;499ohm;1%;0W063;SMD603	[P0BI9:5: {6.0}(R109,R130,R132-R133,R135,R284)]	*NOT available in DP
57	48.0000	PC			RESISTOR;SMD;METAL;910ohm;1%;0W063;SMD603	[P0BI9:1: {24.0}(R199,R207,R215,R223,R230,R233-R234,R237,R240-R241,R244,R247-R248,R251,R254-R255,R275,R279,R283,R287,R291,R295,R299,R303)]	*NOT available in DP
58	49.0000	PC			RESISTOR;METAL;1Kohm;1%;0W063;SMD603	[P0BI9:1: {8.0}(R325-R332)]	*NOT available in DP
59	16.0000	PC			RESISTOR;METAL;1Kohm3;1%;0W063;SMD603	[P0BI9:1: {8.0}(R202,R210,R218,R226,R273,R277,R281,R285)]	*NOT available in DP
60	1.0000	PC			RESISTOR;METAL;2Kohm;1%;0W063;SMD603	[P0BIF:00: {1.0}(R2)]	*NOT available in DP
61	16.0000	PC			RESISTOR;METAL;2Kohm2;1%;0W063;SMD603	[P0BI9:1: {8.0}(R309,R311,R313,R315,R317,R319,R321,R323)]	*NOT available in DP
62	16.0000	PC			RESISTOR;METAL;2Kohm67;1%;0W063;SMD603	[P0BI9:5: {16.0}(R102,R105-R107,R157,R160,R162,R166,R180,R184-R186,R279-R282)]	*NOT available in DP
63	16.0000	PC			RESISTOR;SMT;2Kohm7;1%;METAL;0W063;SMD603	[P0BI9:1: {8.0}(R231-R232,R238-R239,R245-R246,R252-R253)]	*NOT available in DP
64	1.0000	PC			RESISTOR;METAL;3Kohm;1%;0W063;SMD603	[P0BIF:00: {1.0}(R1)]	*NOT available in DP
65	32.0000	PC			RESISTOR;METAL;3Kohm30;1%;0W063;SMD603	[P0BI9:1: {16.0}(R359-R360,R365-R366,R370-R371,R376-R377,R381-R382,R387-R388,R392-R393,R397-R398)]	*NOT available in DP
66	1.0000	PC			RESISTOR;METAL;4Kohm7;1%;0W063;SMD603	[P0BI9:5: {1.0}(R215)]	*NOT available in DP

	Quantity	Unit	S.Sku	M.Sku	Description	Reference Designators	Notes
67	2.0000	PC			RESISTOR;METAL;5Kohm1;1%;0W063;SMD603	[P0BI9:2: {2.0}(R367-R368)]	*NOT available in DP
68	2.0000	PC			RESISTOR;METAL;5Kohm11;1%;0W063;SMD603	[P0BI9:5: {2.0}(R170-R171)]	*NOT available in DP
69	16.0000	PC			RESISTOR;METAL;5Kohm6;1%;0W063;SMD603	[P0BI9:5: {16.0}(R61,R63,R65,R96,R98,R103,R108,R158,R165,R172,R174,R176,R187,R283,R298-R299)]	*NOT available in DP
70	2.0000	PC			RESISTOR;METAL;6Kohm8;1%;0W063;SMD603	[P0BI9:00: {2.0}(R8,R13)]	*NOT available in DP
71	16.0000	PC			RESISTOR;METAL;9Kohm09;1%;0W063;SMD603	[P0BI9:1: {8.0}(R229,R236,R243,R250,R258,R262,R266,R270)]	*NOT available in DP
72	211.0000	PC			RESISTOR;METAL;10Kohm;1%;0W063;SMD603	[P0BIF:00: {1.0}(R54)]	*NOT available in DP
73	1.0000	PC			RESISTOR;METAL;11Kohm;1%;0W063;SMD603	[P0BI9:00: {1.0}(R6)]	*NOT available in DP
74	3.0000	PC			RESISTOR;METAL;12Kohm1;1%;0W063;SMD603	[P0B3I:16: {1.0}(R76)]	*NOT available in DP
75	16.0000	PC			RESISTOR;METAL;12Kohm4;1%;0W063;SMD603	[P0BI9:5: {16.0}(R62,R64,R66-R67,R97,R99-R101,R159,R161,R163-R164,R175,R177-R179)]	*NOT available in DP
76	1.0000	PC			RESISTOR;METAL;13Kohm3;1%;0W063;SMD603	[P0BI9:00: {1.0}(R14)]	*NOT available in DP
77	1.0000	PC			RESISTOR;METAL;15Kohm4;1%;0W063;SMD603	[P0BI9:00: {1.0}(R10)]	*NOT available in DP
78	1.0000	PC			RESISTOR;METAL;16Kohm;1%;0W063;SMD603	[P0B3I:16: {1.0}(R45)]	*NOT available in DP
79	80.0000	PC			RESISTOR;METAL;20Kohm;1%;0W063;SMD603	[P0BI9:5: {44.0}(R2-R4,R6-R8,R14,R22,R24,R26,R28,R30,R36-R37,R40-R41,R52,R54,R56-R57,R68-R69,R86,R117,R119,R122-R123,R167-R168,R231,R234,R236,R240,R245-R246,R249-R250,R265,R267,R288-R289,R291,R297,R303)]	*NOT available in DP
80	1.0000	PC			RESISTOR;METAL;30Kohm90;1%;0W063;SMD603	[P0BI9:00: {1.0}(R12)]	*NOT available in DP
81	33.0000	PC			RESISTOR;METAL;47Kohm;1%;0W063;SMD603	[P0BI9:1: {16.0}(R200-R201,R203-R204,R208-R209,R211-R212,R216-R217,R219-R220,R224-R225,R227-R228)]	*NOT available in DP
82	16.0000	PC			RESISTOR;METAL;68Kohm;1%;0W063;SMD603	[P0BI9:1: {8.0}(R404,R408,R412,R416,R420,R424,R428,R432)]	*NOT available in DP
83	2.0000	PC			RESISTOR;METAL;71Kohm5;1%;0W063;SMD603	[P0BI9:4: {1.0}(R241)]	*NOT available in DP
84	1.0000	PC			RESISTOR;METAL;80Kohm60;1%;0W063;SMD603	[P0BI9:00: {1.0}(R7)]	*NOT available in DP
85	16.0000	PC			RESISTOR;METAL;180Kohm;1%;0W063;SMD603	[P0BI9:1: {8.0}(R197,R205,R213,R221,R334,R337,R340,R343)]	*NOT available in DP
86	1.0000	PC			RESISTOR;METAL;470Kohm;1%;0W063;SMD603	[P0BIF:00: {1.0}(R28)]	*NOT available in DP
87	2.0000	PC			RESISTOR;THICK FILM;22ohm;0W063;5%;SMD402	[P0B3I:16: {2.0}(R70-R71)]	*NOT available in DP
88	1.0000	PC			RESISTOR;METAL;11Kohm3;1%;PPM100;0W063;SMD603	[P0B3I:16: {1.0}(R69)]	*NOT available in DP
89	13.0000	PC			RESISTOR;CARBON;0ohm;5%;0W1;SMD805	[P0BIF:00: {6.0}(R12-R14,R50,R53,R55)]	*NOT available in DP
90	4.0000	PC			RESISTOR;CARBON;2ohm2;5%;0W1;SMD805	[P0BI9:5: {4.0}(R31-R34)]	*NOT available in DP
91	34.0000	PC			RESISTOR;CARBON;5ohm1;5%;0W1;SMD805	[P0BIF:00: {1.0}(R45)]	*NOT available in DP
92	6.0000	PC			RESISTOR;CARBON;10ohm;5%;0W1;SMD805	[P0BI9:5: {2.0}(R35,R205)]	*NOT available in DP
93	4.0000	PC			RESISTOR;CARBON;22ohm;5%;0W1;SMD805	[P0BI9:2: {4.0}(R355-R356,R373-R374)]	*NOT available in DP
94	12.0000	PC			RESISTOR;CARBON;75ohm;5%;0W1;SMD805	[P0BI9:5: {8.0}(R253-R260)]	*NOT available in DP
95	2.0000	PC			RESISTOR;CARBON;100ohm;5%;0W1;SMD805	[P0BI9:5: {1.0}(R15)]	*NOT available in DP
96	2.0000	PC			RESISTOR;CARBON;150ohm;5%;0W1;SMD805	[P0BI9:5: {2.0}(R19-R20)]	*NOT available in DP
97	1.0000	PC			RESISTOR;CARBON;200ohm;5%;0W1;SMD805	[P0BI9:5: {1.0}(R223)]	*NOT available in DP
98	16.0000	PC			RESISTOR;CARBON;390ohm;5%;0W1;SMD805	[P0BI9:1: {8.0}(R401,R405,R409,R413,R417,R421,R425,R429)]	*NOT available in DP
99	3.0000	PC			RESISTOR;CARBON;470ohm;5%;0W1;SMD805	[P0BI9:10: {2.0}(R1,R36)]	*NOT available in DP
100	16.0000	PC			RESISTOR;CARBON;100Kohm;5%;0W1;SMD805	[P0BI9:1: {8.0}(R433,R466-R468,R480,R485,R490,R495)]	*NOT available in DP
101	6.0000	PC			RESISTOR;METAL;100ohm;1%;0W1;SMD805	[P0BI9:1: {1.0}(R10)]	*NOT available in DP
102	7.0000	PC			RESISTOR;METAL;120ohm;1%;0W1;SMD805	[P0BI9:1: {2.0}(R4,R28)]	*NOT available in DP
103	32.0000	PC			RESISTOR;METAL;150ohm;1%;0W1;SMD805	[P0BI9:1: {16.0}(R434,R437-R438,R441-R442,R445-R446,R449-R450,R453-R454,R457-R458,R461-R462,R465)]	*NOT available in DP
104	3.0000	PC			RESISTOR;METAL;200ohm;1%;0W1;SMD805	[P0BI9:1: {1.0}(R27)]	*NOT available in DP
105	4.0000	PC			RESISTOR;METAL;357ohm;1%;0W1;SMD805	[P0BI9:1: {1.0}(R3)]	*NOT available in DP

	Quantity	Unit	S.Sku	M.Sku	Description	Reference Designators	Notes
106	4.0000	PC			RESISTOR;METAL;1Kohm;1%;0W1;SMD805	[P0BI9:10: {2.0}(R10,R40)]	*NOT available in DP
107	32.0000	PC			RESISTOR;METAL;2Kohm20;1%;0W1;SMD805	[P0BI9:5: {12.0}(R220-R222,R226-R228,R243-R244,R262-R263,R268-R269)]	*NOT available in DP
108	5.0000	PC			RESISTOR;METAL;4Kohm7;1%;0W1;SMD805	[P0BI9:10: {5.0}(R42-R43,R71-R72,R81)]	*NOT available in DP
109	18.0000	PC			RESISTOR;METAL;8Kohm20;1%;0W1;SMD603	[P0BIF:00: {1.0}(R29)]	*NOT available in DP
110	1.0000	PC			RESISTOR;METAL;10Kohm;1%;0W1;SMD805	[P0BI9:10: {1.0}(R41)]	*NOT available in DP
111	1.0000	PC			RESISTOR;METAL;18Kohm;1%;0W1;SMD805	[P0BI9:10: {1.0}(R6)]	*NOT available in DP
112	32.0000	PC			RESISTOR;METAL;47Kohm;1%;0W1;SMD805	[P0BI9:1: {16.0}(R478-R479,R481-R484,R486-R489,R491-R494,R496-R497)]	*NOT available in DP
113	8.0000	PC			RESISTOR;METAL;49ohm9;1%;PPM50;0W125;SMD603	[P0BI9:5: {8.0}(R271-R278)]	*NOT available in DP
114	1.0000	PC			RESISTOR;CARBON;6Kohm8;5%;0W25;SMD1206	[P0BI9:10: {1.0}(R53)]	*NOT available in DP
115	1.0000	PC			RESISTOR;METAL;1ohm;1%;0W25;SMD1206	[P0BI9:10: {1.0}(R75)]	*NOT available in DP
116	2.0000	PC			RESISTOR;METAL;10ohm;1%;0W25;SMD1206	[P0BI9:10: {2.0}(R11,R74)]	*NOT available in DP
117	1.0000	PC			RESISTOR;METAL;20ohm;1%;0W25;SMD1206	[P0BI9:10: {1.0}(R7)]	*NOT available in DP
118	1.0000	PC			RESISTOR;METAL;240ohm;1%;0W25;SMD1206	[P0BI9:10: {1.0}(R48)]	*NOT available in DP
119	2.0000	PC			RESISTOR;METAL;1Kohm;1%;0W25;SMD1206	[P0BI9:10: {2.0}(R96-R97)]	*NOT available in DP
120	1.0000	PC			RESISTOR;SMD;METAL;2Kohm;1%;0W25;SMD1206	[P0BI9:10: {1.0}(R83)]	*NOT available in DP
121	4.0000	PC			RESISTOR;METAL;3Kohm;1%;0W25;SMD1206	[P0BI9:10: {4.0}(R30-R31,R94-R95)]	*NOT available in DP
122	1.0000	PC			RESISTOR;METAL;4.7 kohm;0.25 W;1 %;SMD1206	[P0BI9:10: {1.0}(R52)]	*NOT available in DP
123	1.0000	PC			RESISTOR;METAL;6kohm81;1%;METAL;0W25;SMD1206	[P0BI9:10: {1.0}(R82)]	*NOT available in DP
124	1.0000	PC			RESISTOR;METAL;10Kohm;1%;0W25;SMD1206	[P0BI9:10: {1.0}(R9)]	*NOT available in DP
125	3.0000	PC			RESISTOR;SMD;METAL;150Kohm;1%;0W25;SMD1206	[P0BI9:10: {3.0}(R3-R5)]	*NOT available in DP
126	4.0000	PC			RESISTOR;SMT;470Kohm;5%;METAL;0W25;SMD1206	[P0BI9:10: {4.0}(R32-R35)]	*NOT available in DP
127	2.0000	PC			RESISTOR;THICK FILM;22ohm;5%;0W25;SMD1206	[P0BI9:10: {2.0}(R8,R26)]	*NOT available in DP
128	2.0000	PC			RESISTOR;THICK FILM;510ohm;0W25;5%;SMD1206	[P0BI9:10: {2.0}(R60,R62)]	*NOT available in DP
129	1.0000	PC			RESISTOR;CARBON;47ohm;5%;1W;SMD2512	[P0BI9:5: {1.0}(R182)]	*NOT available in DP
130	3.0000	PC			RESISTOR;CARBON;1Kohm;5%;0W0625;SMD402	[P0B3I:16: {3.0}(R44,R77-R78)]	*NOT available in DP
131	1.0000	PC			RESISTOR;CARBON;2KOhm;5%;0W0625;SMD402	[P0B3I:16: {1.0}(R74)]	*NOT available in DP
132	30.0000	PC			RESISTOR;THICK FILM;10Kohm;5%;0W0625;SMD402	[P0B3I:16: {30.0}(R1-R9,R20-R22,R24-R29,R31-R32,R35,R42-R43,R46,R51,R61,R67,R75,R79,R82)]	*NOT available in DP
133	1.0000	PC			RESISTOR;THICK FILM;150Ohm;0W0625;1%;SMD402	[P0B3I:16: {1.0}(R62)]	*NOT available in DP
134	3.0000	PC			RESISTOR;METAL;1Kohm05;1%;METAL;0W0625;SMD402	[P0B3I:16: {3.0}(R55,R57,R81)]	*NOT available in DP
135	2.0000	PC			RESISTOR;THICK FILM;33ohm;1%;PPM100;0W0625;SMD402	[P0B3I:16: {2.0}(R84-R85)]	*NOT available in DP
136	3.0000	PC			RESISTOR;METAL;PPM100;100ohm;0W0625;1%;SMD402	[P0B3I:16: {3.0}(R72-R73,R83)]	*NOT available in DP
137	1.0000	PC			RESISTOR;METAL;1Mohm;1%;PPM100;0W0625;SMD402	[P0B3I:16: {1.0}(R80)]	*NOT available in DP
138	1.0000	PC	Y04-05000-05423	I04-05000-05423	THERMISTOR;NTC;5ohm;+/-20%;6A;DIA:15mm;PITCH:7mm5;(THINKING SCK15056MSY)	[P0BI9:10: {1.0}(R39)]	
139	1.0000	PC			RESISTOR;METAL;330mohm;2W;5%;T/B;METAL OXIDE FILM;T73	[P0BI9:10: {1.0}(R12)]	*NOT available in DP
140	1.0000	PC			RESISTOR;CARBON;10ohm;5%;0W5;LEAD WIRE	[P0BI9:10: {1.0}(R29)]	*NOT available in DP
141	2.0000	PC			RESISTOR;CARBON;5ohm1;5%;0W5;LEAD WIRE	[P0BI9:10: {2.0}(R28,R45)]	*NOT available in DP
142	1.0000	PC			RESISTOR;CARBON;22ohm;5%;1W;LEAD WIRE	[P0BI9:10: {1.0}(R76)]	*NOT available in DP
143	2.0000	PC			RESISTOR;CARBON;100ohm;5%;1W;LEAD WIRE	[P0BI9:10: {2.0}(R51,R77)]	*NOT available in DP
144	1.0000	PC			RESISTOR;CARBON;47Kohm;5%;1W;LEAD WIRE	[P0BI9:10: {1.0}(R46)]	*NOT available in DP
145	2.0000	PC			RESISTOR;CARBON;1Kohm;5%;2W;LEAD WIRE	[P0BI9:10: {2.0}(R14,R78)]	*NOT available in DP
146	1.0000	PC			RESISTOR;LEAD WIRE;100Kohm;5%;CARBON;2W	[P0BI9:10: {1.0}(R27)]	*NOT available in DP
147	2.0000	PC			RESISTOR;METAL;47Kohm;5%;2W;LEAD WIRE	[P0BI9:10: {2.0}(R2,R13)]	*NOT available in DP

Potentiometer

	Quantity	Unit	S.Sku	M.Sku	Description	Reference Designators	Notes
1	2.0000	PC	Y03-00000-70024	I03-00000-77675	POTENTIOMETER;50 kohm;A;STEREO;METAL SHAFT:20MM;VERTICAL;NO NUT AND WASHER;0CC;30gf~70gf;POLYSHINE	[P0BI9:2: {2.0}(VR2-VR3)]	
2	1.0000	PC	Y03-00000-77692	I03-00000-77692	POTENTIOMETER;50 kohm;C;MONO;METAL SHAFT:20MM;VERTICAL;NO NUT AND WASHER;0CC;30gf~70gf;POLYSHINE	[P0BI9:2: {1.0}(VR1)]	

Encoder

	Quantity	Unit	S.Sku	M.Sku	Description	Reference Designators	Notes
1	9.0000	PC	Y32-00000-18946	I32-00000-18946	ENCODER;2.5 MM;SHT:25;24PL;0CC;ENDLESS;30~80gf;TRANSPARENT SHAFT	[P0BI9:2: {9.0}(SW28-SW29,SW31-SW33,SW42,SW49-SW51)]	
2	6.0000	PC	Y32-00000-19166	I32-00000-19166	ENCODER;24PL;SWITCH;30~80gf;24CC;ENDLESS;SHT:25mm3	[P0BI9:8: {6.0}(SW2-SW7)]	

Switch

	Quantity	Unit	S.Sku	M.Sku	Description	Reference Designators	Notes
1	1.0000	PC	Y87-00000-39582	I87-00000-39582	SWITCH;TACTILE;1;NONLOCK;4;VERTICAL;HANDLE:5	[P0BI9:5: {1.0}(SW1)]	

Transistor

	Quantity	Unit	S.Sku	M.Sku	Description	Reference Designators	Notes
1	1.0000	PC			TRANSISTOR;TO220AB;3;MOSFET;N-CH;80A;75V;Rds:7.34mohm;IRFB3607PbF	[P0BI9:10: {1.0}(T6)]	*NOT available in DP
2	1.0000	PC			TRANSISTOR;TO220F;3;MOSFET;N-CH;800V;7.4A;AOTF8N80	[P0BI9:10: {1.0}(T3)]	*NOT available in DP
3	1.0000	PC			TRANSISTOR;BC846B;SOT;SMD	[P0BI9:00: {1.0}(T1)]	*NOT available in DP
4	1.0000	PC			TRANSISTOR;BC856B;SOT;SMD	[P0BI9:00: {1.0}(T2)]	*NOT available in DP
5	53.0000	PC			TRANSISTOR;MBTA06;SOT	[P0B3I:16: {1.0}(T2)]	*NOT available in DP
6	19.0000	PC			TRANSISTOR;MBTA56;SOT	[P0B3I:16: {1.0}(T1)]	*NOT available in DP
7	32.0000	PC			TRANSISTOR;KTA1268GR;T/R;PITCH:2MM54;TO92	[P0BI9:1: {16.0}(T1-T16)]	*NOT available in DP
8	2.0000	PC			TRANSISTOR;MMBT3904LT1;SOT23;SMD	[P0BI9:5: {2.0}(T1-T2)]	*NOT available in DP
9	1.0000	PC			TRANSISTOR;MMBT3906;SOT23;SMD	[P0BI9:10: {1.0}(T7)]	*NOT available in DP
10	34.0000	PC			TRANSISTOR;BC327-25;TO92;PITCH:2.54;TAPE	[P0BI9:4: {18.0}(T19-T36)]	*NOT available in DP
11	34.0000	PC			TRANSISTOR;BC337-25;TO92;P:2.54(BENT LEAD;TAPE and REEL);FAIRCHILD	[P0BI9:4: {18.0}(T1-T18)]	*NOT available in DP
12	20.0000	PC			TRANSISTOR;SST113;SOT	[P0B3I:2: {16.0}(T3-T18)]	*NOT available in DP

Cover

	Quantity	Unit	S.Sku	M.Sku	Description	Reference Designators	Notes
1	1.0000	PC	Z11-00001-21078	J11-00001-32971	COVERING;P0BI9- PROTECTIVE COVER		

REVISION HISTORY				
REV	DESCRIPTION	DATE	REVISED	APPROVED
A0	Drawing release	2014-08-03	Tony.Liang	Shirley.Xiao
A1	update bom	2014-10-18	Tony.Liang	Shirley.Xiao

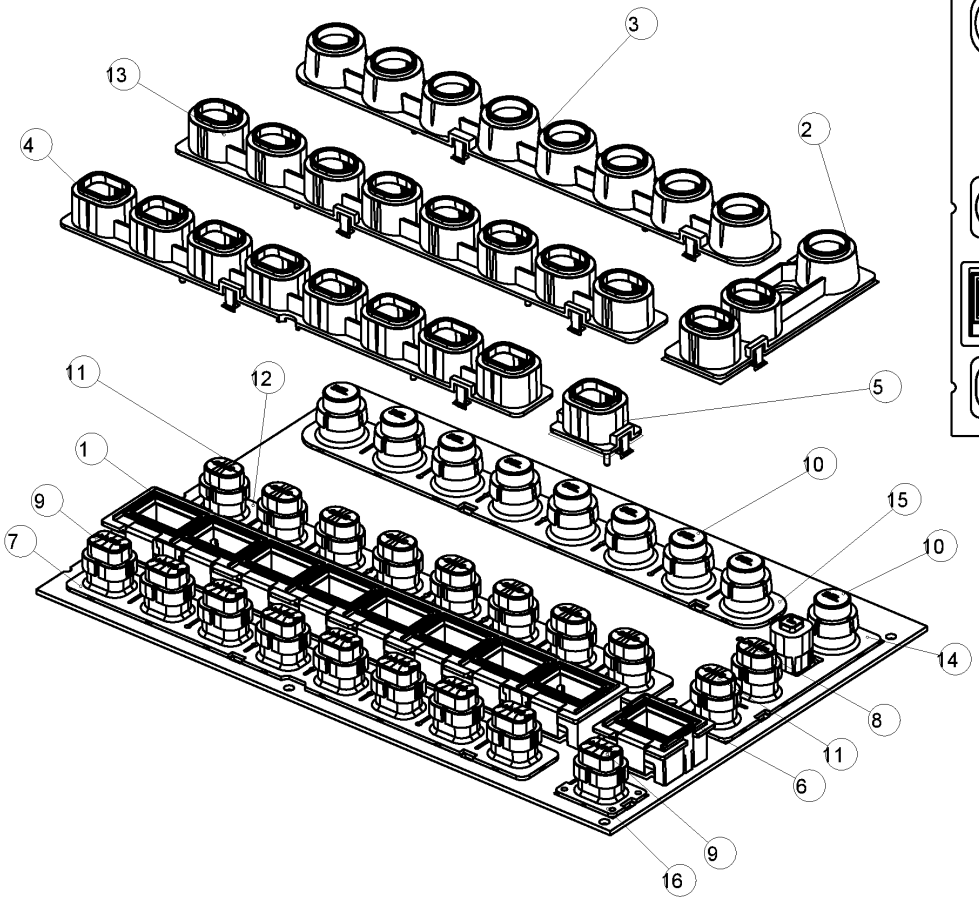

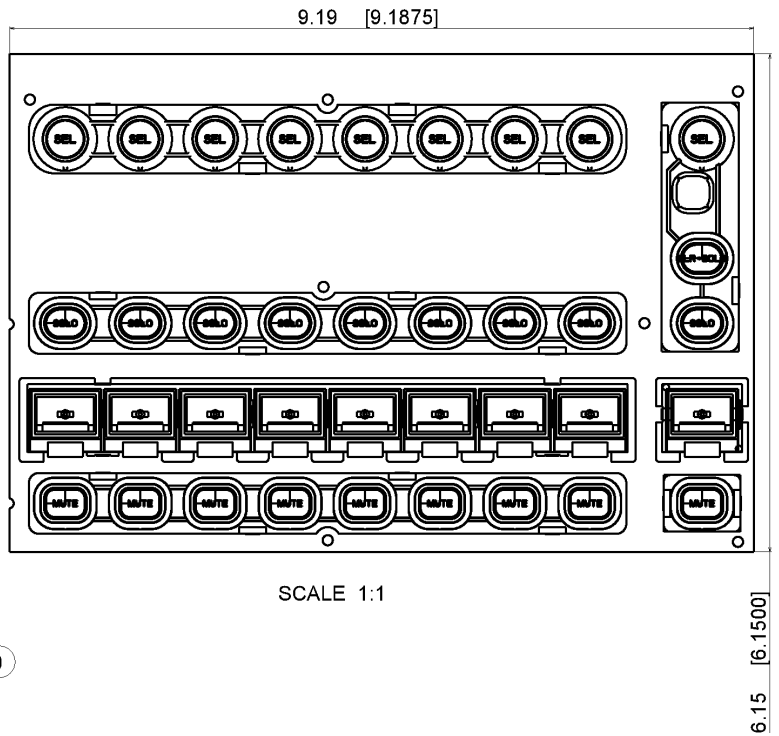

ITEM	ITEM NUMBER	QTY	ITEM CODE	CONSTRUCTION NUMBER
16	GS3-00000-95742	1	RUBBER REC-1 REV.A	022-00001-01390
15	GS3-00000-95755	1	RUBBER R9 REV.A	022-00001-01392
14	GS3-00000-95756	1	RUBBER R1REC2 REV.A	022-00001-01393
13	GS3-00000-96005	1	P0B3I-OVAL-HOUSING-8	022-00001-01542
12	GS3-00000-95752	1	OVAL-RUBBER-8	022-00001-01400
11	I63-00001-03087	9	MAIN BUTTON: SOLO	022-00001-01523
10	I63-00001-03082	9	MAIN BUTTON: SEL	022-00001-01522
9	I63-00001-03081	9	MAIN BUTTON: MUTE	022-00001-01521
8	I63-00001-03089	1	MAIN BUTTON: CLR SOLO	022-00001-01523
7	GS3-00000-96797	1	M32-RUBBER-REC8	022-00001-01403
6	GS3-00000-97232	1	M32-LCD-HOLDER-1	022-00001-01559
5	GS3-00000-95606	1	M32-HOUSING-REC1	022-00001-01527
4	GS3-00000-95991	1	M32 HOUSING REC 8	022-00001-01533
3	GS3-00000-95990	1	M32 HOUSING R8	022-00001-01532
2	GS3-00000-95992	1	M32 HOUSING R1REC2	022-00001-01534
1	GS3-00000-97233	1	LCD-HOLDER-8	022-00001-01585

All information (including drawings and diagrams) contained in this document is the property of MUSIC GROUP LTD. Addressees whom the information is confided to shall maintain the information in confidence and shall not release it to any unauthorised third parties (except under attorney client privilege or under appropriate confidentiality agreements). Any unauthorised disclosure, use, application or any other dealings in the information shall result in civil and/or (where applicable) criminal liabilities and penalties.

PROJECT: P0BI9	DRAWN: Liang.Tony.	DESCRIPTION: P0BI9-PCBA_FADER_R	
MATERIAL:	CHECKED: Ye.HuaMing		
FINISH:	APPROVED: Xiao.Shirley	SIZE: A2	DRAWING NUMBER: 014-00001-14570 REV: A
	DATE: 2014-07-15	SCALE 1:1	SHEET 1 OF 1

REVISION HISTORY				
REV	DESCRIPTION	DATE	REVISED	APPROVED
A0	Drawing release	2014-08-03	Tony.Liang	Shirley.Xiao
A1	update bom	2014-10-18	Tony.Liang	Shirley.Xiao

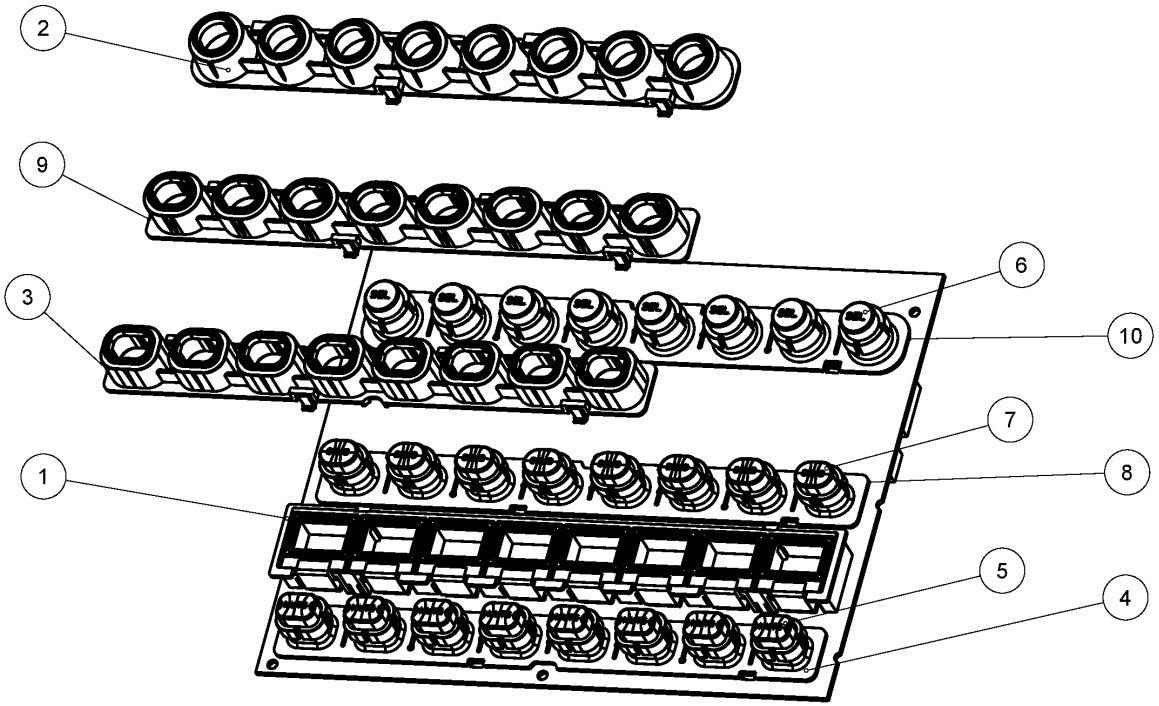

ITEM	ITEM NUMBER	QTY	ITEM CODE	CONSTRUCTION NUMBER
10	G53-00000-95755	1	RUBBER R8 REV.A	022-00001-01392
9	G53-00000-96005	1	P0B3I-OVAL-HOUSING-8	022-00001-01542
8	G53-00000-95782	1	OVAL-RUBBER-8	022-00001-01400
7	I63-00001-03067	8	MAIN BUTTON: SOLO	022-00001-01523
6	I63-00001-03062	8	MAIN BUTTON: SEL	022-00001-01522
5	I63-00001-03081	8	MAIN BUTTON: MUTE	022-00001-01521
4	G53-00000-98797	1	M32-RUBBER-REC8	022-00001-01403
3	G53-00000-95991	1	M32 HOUSING REC 8	022-00001-01533
2	G53-00000-95990	1	M32 HOUSING R8	022-00001-01532
1	G53-00000-97233	1	LCD-HOLDER-8	022-00001-01565

All information (including drawings and diagrams) contained in this document is the property of MUSIC GROUP LTD. Addressees whom the information is confided to shall maintain the information in confidence and shall not release it to any unauthorized third parties (except under attorney client privilege or under appropriate confidentiality agreements). Any unauthorized disclosure, use, application or any other dealings in the information shall result in civil and/or (where applicable) criminal liabilities and penalties.

MUSIC GROUP

PROJECT: P0BI9	DRAWN: Liang.Tony	DESCRIPTION: P0BI9-PCBA_FADER_L	
MATERIAL:	CHECKED: YE.HuaMing		
FINISH:	APPROVED: Xiao.Shirley	SIZE: A3	DRAWING NUMBER: 014-00001-14568 REV: A
	DATE: 2014-08-03	SCALE 7:10	SHEET 1 OF 1

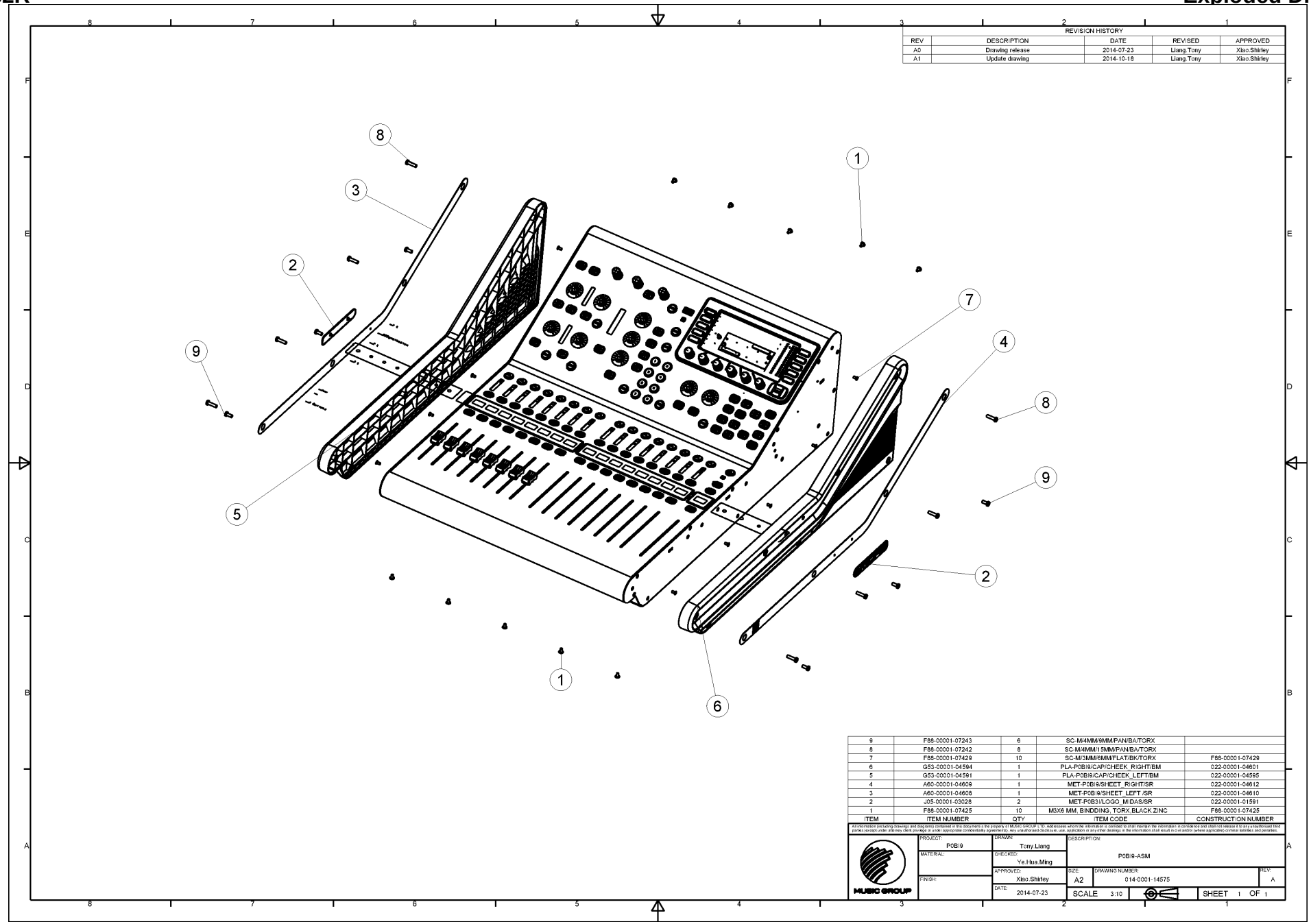
REVISION HISTORY
REV | DESCRIPTION | DATE | REVISED | APPROVED
A0 | Drawing release | 2014-07-23 | Liang.Tony | Xiao.Shirley
A1 | Update drawing | 2014-10-18 | Liang.Tony | Xiao.Shirley
8
3
2
9
5
1
7
4
8
9
2
1
6
9 | F88-00001-07243 | 6 | SC-M/4MM/9MM/PAN/BA/TORX |
8 | F88-00001-07242 | 8 | SC-M/4MM/15MM/PAN/BA/TORX |
7 | F88-00001-07429 | 10 | SC-M/3MM/6MM/FLAT/BK/TORX | F88-00001-07429
6 | G53-00001-04594 | 1 | PLA-P0BI9/CAP/CHEEK_RIGHT/BM | 022-00001-04601
5 | G53-00001-04591 | 1 | PLA-P0BI9/CAP/CHEEK_LEFT/BM | 022-00001-04595
4 | A60-00001-04609 | 1 | MET-P0BI9/SHEET_RIGHT/SR | 022-00001-04612
3 | A60-00001-04608 | 1 | MET-P0BI9/SHEET_LEFT_/SR | 022-00001-04610
2 | J05-00001-03028 | 2 | MET-P0B3/LOGO_MIDAS/SR | 022-00001-01591
1 | F88-00001-07425 | 10 | M3X6 MM, BINDDING, TORX,BLACK ZINC | F88-00001-07425
ITEM | ITEM NUMBER | QTY | ITEM CODE | CONSTRUCTION NUMBER
All information (including drawings and diagrams) contained in this document is the property of MUSIC GROUP LTD. Addressees whom the information is confided to shall maintain the information in confidence and shall not release it to any unauthorised third parties (except under attorney client privilege or under appropriate confidentiality agreements). Any unauthorised disclosure, use, application or any other dealings in the information shall result in civil and/or (where applicable) criminal liabilities and penalties.
MUSIC GROUP
PROJECT: P0BI9
MATERIAL:
FINISH:
DRAWN: Tony Liang
CHECKED: Ye.Hua.Ming
APPROVED: Xiao.Shirley
DATE: 2014-07-23
DESCRIPTION: P0BI9-ASM
SIZE: A2
DRAWING NUMBER: 014-0001-14575
REV: A
SCALE 3:10
SHEET 1 OF 1

REVISION HISTORY				
REV	DESCRIPTION	DATE	REVISED	APPROVED
A0	Drawing release	2014-08-03	Tony.Liang	Shirley.Xiao
A1	update bom	2014-10-18	Tony.Liang	Shirley.Xiao
A2	Update the P/N of holder	2014-11-03	Tony.Liang	Shirley.Xiao

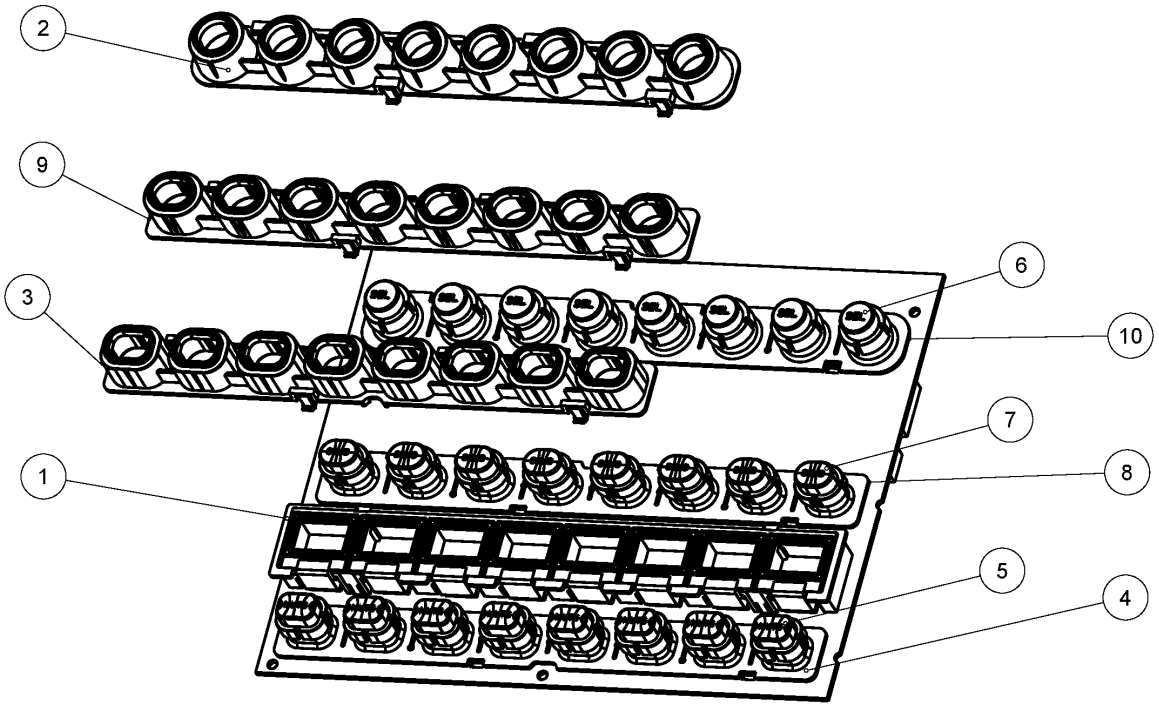

ITEM	ITEM NUMBER	QTY	ITEM CODE	CONSTRUCTION NUMBER
10	G53-00000-95755	1	RUBBER R8 REV.A	022-00001-01392
9	G53-00000-96005	1	P0B3I-OVAL-HOUSING-8	022-00001-01542
8	G53-00000-95782	1	OVAL-RUBBER-8	022-00001-01400
7	I63-00001-03067	8	MAIN BUTTON: SOLO	022-00001-01523
6	I63-00001-03062	8	MAIN BUTTON: SEL	022-00001-01522
5	I63-00001-03081	8	MAIN BUTTON: MUTE	022-00001-01521
4	G53-00000-98797	1	M32-RUBBER-REC8	022-00001-01403
3	G53-00000-95991	1	M32 HOUSING REC 8	022-00001-01533
2	G53-00000-95990	1	M32 HOUSING R8	022-00001-01532
1	G53-00001-21095	1	LCD-HOLDER-8	022-00001-01565

All information (including drawings and diagrams) contained in this document is the property of MUSIC GROUP LTD. Addressees whom the information is confided to shall maintain the information in confidence and shall not release it to any unauthorized third parties (except under attorney client privilege or under appropriate confidentiality agreements). Any unauthorized disclosure, use, application or any other dealings in the information shall result in civil and/or (where applicable) criminal liabilities and penalties.

MUSIC GROUP

PROJECT: P0BI9	DRAWN: Liang.Tony	DESCRIPTION: P0BI9-PCBA_FADER_L	
MATERIAL:	CHECKED: YE.HuaMing		
FINISH:	APPROVED: Xiao.Shirley	SIZE: A3	DRAWING NUMBER: 014-00001-14568 REV: A
	DATE: 2014-08-03	SCALE 7:10	SHEET 1 OF 1

REVISION HISTORY				
REV	DESCRIPTION	DATE	REVISED	APPROVED
A0	Drawing release	2014-07-11	Tony.Liang	Shirley.Xiao

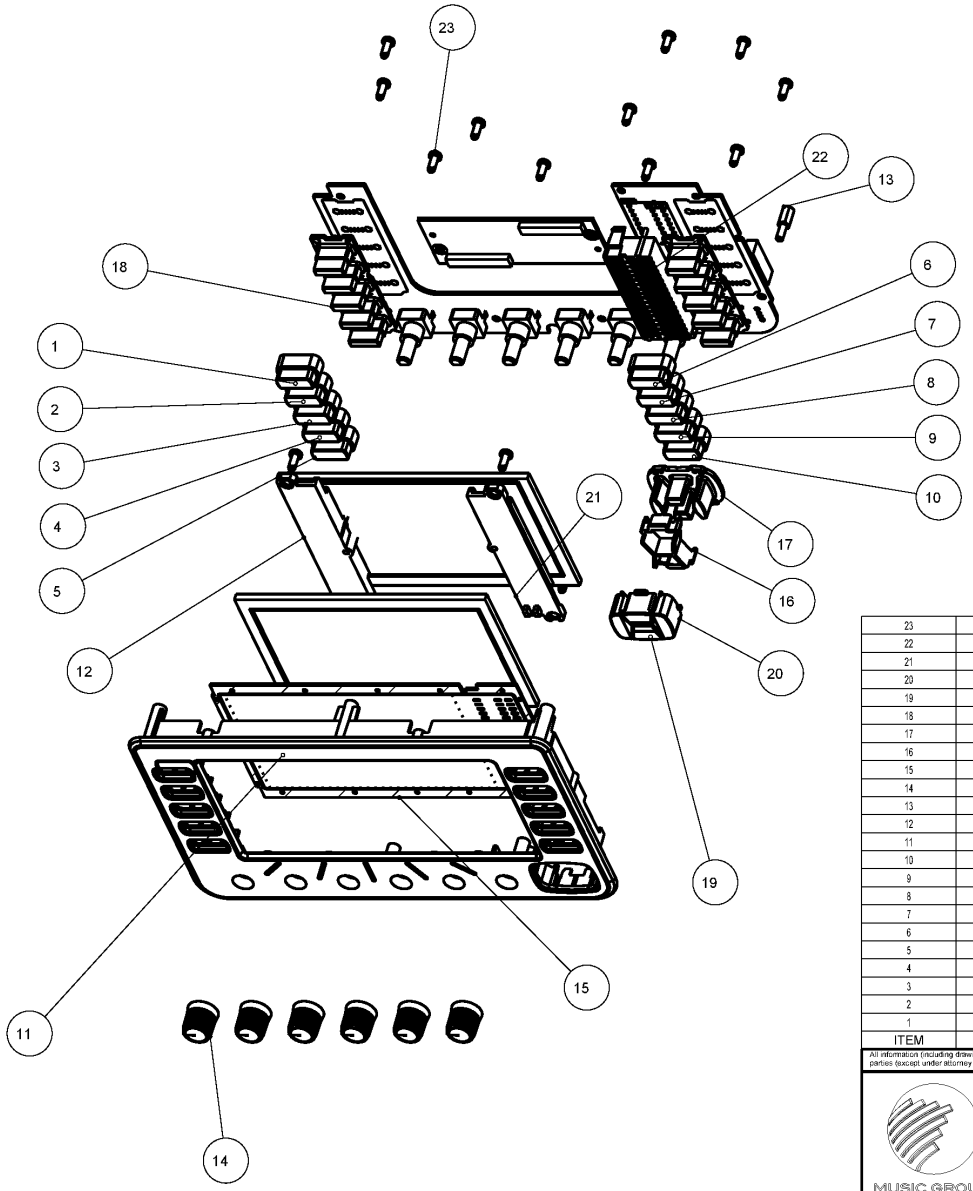

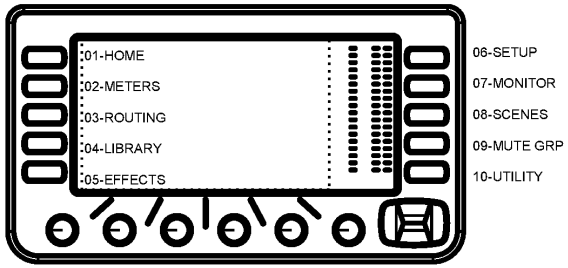

ITEM	ITEM NUMBER	QTY	ITEM CODE	CONSTRUCTION NUMBER
23	F88-30080-30247*	15	SC-BT03*08-03-B-ZP-BLK[R]	F88-30080-30247
22	G54-00000-71645	1	PLA-P0AWQ/WINDOW/BK/WH/TR	022-00000-72860
21	G53-00000-71591	1	PLA-P0AWQ/MOUNT/BK	022-00000-72841
20	I64-00000-72788	2	PLA-P0AWQ/BUTTON/WH/TR/BK	022-00000-72704
19	I64-00000-72785	2	PLA-P0AWQ/BUTTON/WH/TR/BK	022-00000-72701
18	G53-00000-71593	2	PLA-P0AWQ/BUTTON/DW	022-00000-72848
17	G53-00000-71592	1	PLA-P0AWQ/BUTTON/DW	022-00000-72845
16	G53-00000-75327	1	PLA-P0AWQ/BRACKET/BK	022-00000-75329
15	I64-00000-72499	1	PLA-P0AWN/WINDOW/WH/TR	022-00000-72095
14	G52-00001-11494	6	P0BI9-ENCODER-KNOB	022-00001-02646
13	F94-00000-80553	1	MET-STUD/M/3MM/9.2MM/HEX[R]	F94-00000-80553
12	G53-00000-71590	1	DRA-MET/P0AWQ-MOUNT	022-00000-72838
11	I63-00001-19396	1	DRA-MET/P0AWQ-MOUNT	022-00000-72833
10	I64-00000-72780	1	10-PLA-P0000/BUTTON/WH/TR/BK UTILITY	022-00000-72692
9	I64-00000-72778	1	09-PLA-P0000/BUTTON/WH/TR/BK MUTE GRP	022-00000-72692
8	I64-00000-72776	1	08-PLA-P0000/BUTTON/WH/TR/BK SCENES	022-00000-72692
7	I64-00000-72773	1	07-PLA-P0000/BUTTON/WH/TR/BK MONITOR	022-00000-72692
6	I64-00000-72770	1	06-PLA-P0000/BUTTON/WH/TR/BK SETUP	022-00000-72692
5	I64-00000-72764	1	05-PLA-P0000/BUTTON/WH/TR/BK EFFECTS	022-00000-72692
4	I64-00000-72760	1	04-PLA-P0000/BUTTON/WH/TR/BK LIBRARY	022-00000-72692
3	I64-00000-72756	1	03-PLA-P0000/BUTTON/WH/TR/BK ROUNTING	022-00000-72692
2	I64-00000-72750	1	02-PLA-P0000/BUTTON/WH/TR/BK METERS	022-00000-72692
1	I64-00000-72744	1	01-PLA-P0000/BUTTON/WH/TR/BK HOME	022-00000-72692

All information (including drawings and diagrams) contained in this document is the property of MUSIC GROUP LTD. Addressees whom the information is confided to shall maintain the information in confidence and shall not release it to any unauthorized third parties (except under attorney client privilege or under appropriate confidentiality agreements). Any unauthorized disclosure, use, application or any other dealings in the information shall result in civil and/or (where applicable) criminal liabilities and penalties.

MUSIC GROUP

PROJECT:	
MATERIAL:	
FINISH:	
DRAWN:	Tony.Liang
CHECKED:	HuaMing.Ye
APPROVED:	Shirley.Xiao
DATE:	2017-07-11
DESCRIPTION:	P0BI9-SECRNCTRL DISPLAY-ASM
SIZE:	A3
DRAWING NUMBER:	014-00001-14572
REV:	A
SCALE	1:2
SHEET	1 OF 1

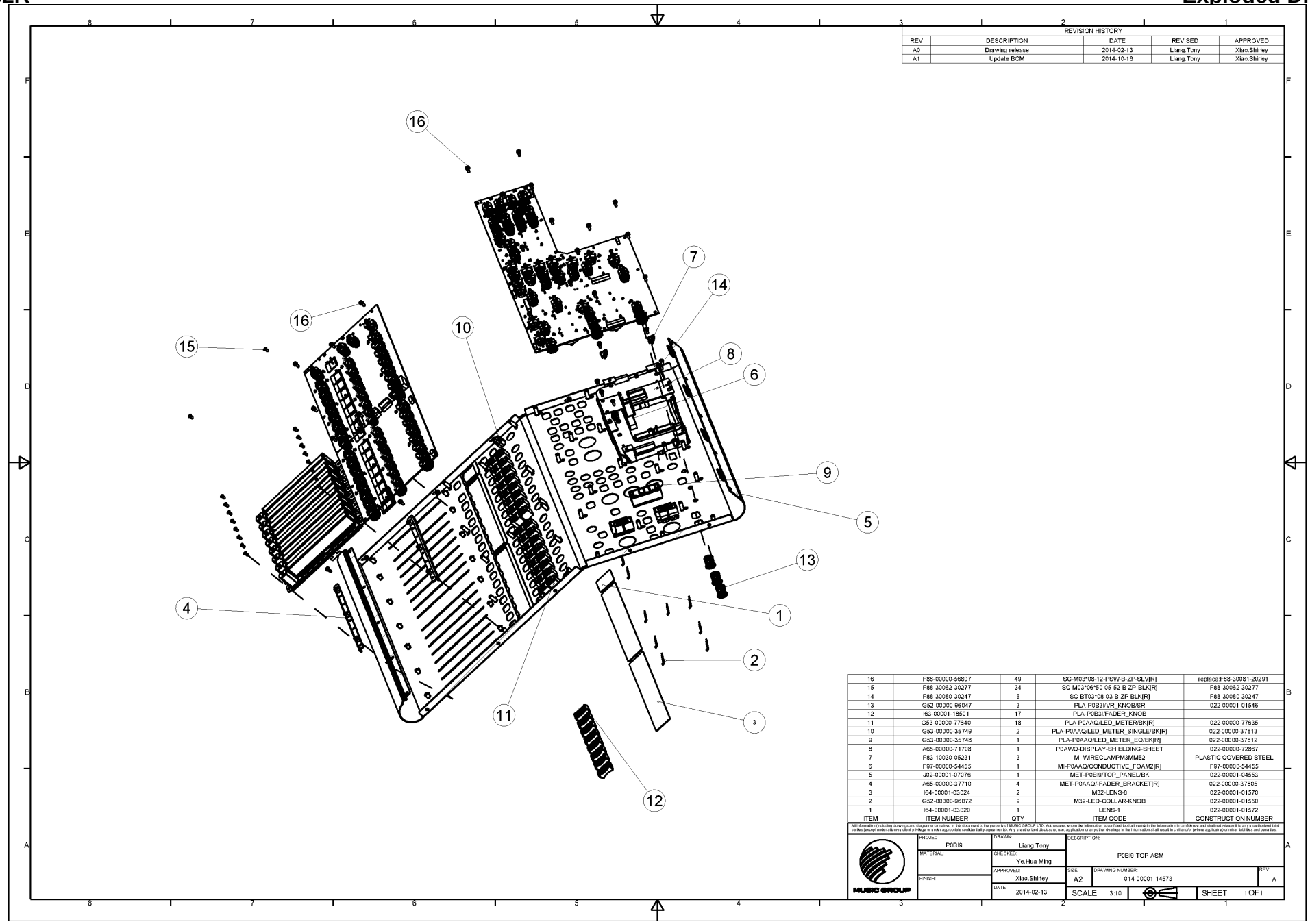

REVISION HISTORY

REV	DESCRIPTION	DATE	REVISED	APPROVED
A0	Drawing release	2014-02-13	Liang.Tony	Xiao.Shirley
A1	Update BOM	2014-10-18	Liang.Tony	Xiao.Shirley

ITEM	ITEM NUMBER	QTY	ITEM CODE	CONSTRUCTION NUMBER
16	F88-00000-56807	49	SC-M03*08-12-PSW-B-ZF-SLV[R]	replace:F88-30081-20291
15	F88-30062-30277	34	SC-M03*06*50-05-52-B-ZF-BLK[R]	F88-30062-30277
14	F88-30080-30247	5	SC-BT03*06-03-B-ZF-BLK[R]	F88-30080-30247
13	G52-00000-96047	3	PLA-P0B3I/VR_KNOB/SR	022-00001-01546
12	I63-00001-18501	17	PLA-P0B3I/FADER_KNOB	
11	G53-00000-77640	18	PLA-P0AAQ/LED_METER/BK[R]	022-00000-77635
10	G53-00000-35749	2	PLA-P0AAQ/LED_METER_SINGLE/BK[R]	022-00000-37813
9	G53-00000-35748	1	PLA-P0AAQ/LED_METER_EQ/BK[R]	022-00000-37812
8	A65-00000-71708	1	P0AWQ-DISPLAY-SHIELD/NG-SHEET	022-00000-72867
7	F83-10030-05231	3	MI-WIRECLAMPM3MM52	PLASTIC COVERED STEEL
6	F97-00000-54455	1	MI-P0AAQ/CONDUCTIVE_FOAM2[R]	F97-00000-54455
5	J02-00001-07076	1	MET-P0B9/TOP_PANEL/BK	022-00001-04553
4	A65-00000-37710	4	MET-P0AAQ/FADER_BRACKET[R]	022-00000-37805
3	I64-00001-03024	2	M32-LENS-8	022-00001-01570
2	G52-00000-96072	9	M32-LED-COLLAR-KNOB	022-00001-01550
1	I64-00001-03020	1	LENS-1	022-00001-01572

All information (including drawings and diagrams) contained in this document is the property of MUSIC GROUP LTD. Addressees whom the information is confided to shall maintain the information in confidence and shall not release it to any unauthorised third parties (except under attorney client privilege or under appropriate confidentiality agreements). Any unauthorised disclosure, use, application or any other dealings in the information shall result in civil and/or (where applicable) criminal liabilities and penalties.

PROJECT:	P0B9
MATERIAL:	
FINISH:	
DRAWN:	Liang.Tony
CHECKED:	Ye,Hua Ming
APPROVED:	Xiao.Shirley
DATE:	2014-02-13
DESCRIPTION:	P0B9-TOP-ASM
SIZE:	A2
DRAWING NUMBER:	014-00001-14573
REV:	A
SCALE	3:10
SHEET	1 OF 1

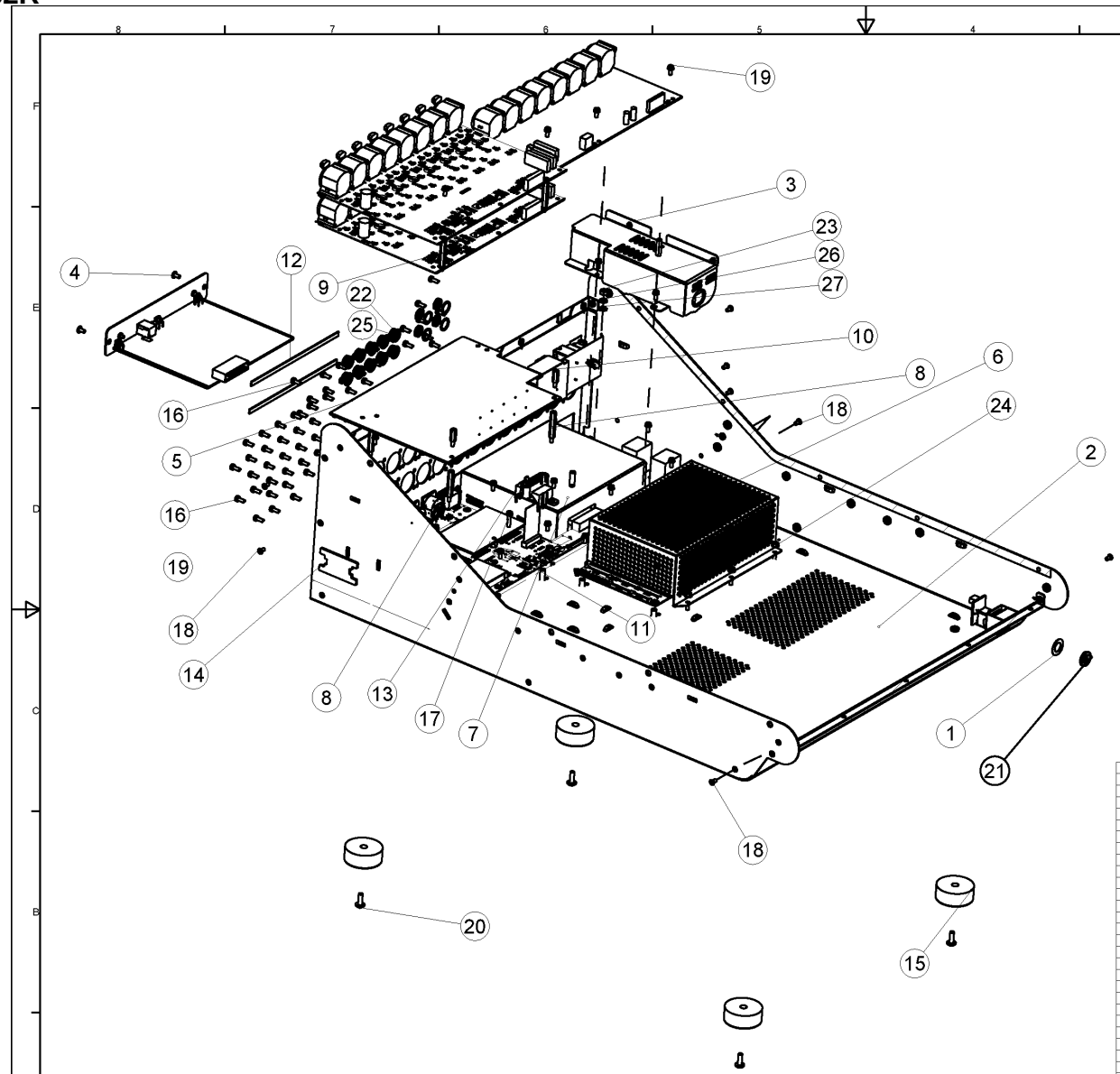

REVISION HISTORY

REV	DESCRIPTION	DATE	REVISED	APPROVED
A0	Drawing release	2014-02-13	Liang.Tony	Xiao.Shirley
A1	update bom	2014-10-18	Liang.Tony	Xiao.Shirley

ITEM	ITEM NUMBER	QTY	ITEM CODE	CONSTRUCTION NUMBER
27	F96-40400-70170	1	SC-WATEEXT4*7*1.7[R]	F96-40400-70170
26	F96-20400-70170	1	SC-WASPR4*7*1.7[R]	F96-20400-70170
25	F96-10961-30505	14	SC-WAPLNP9.6*13*0.5/NP/SLV[R]	F96-10961-30505
24	F85-00000-09365	6	SC-NUT/M3MM/3.2MMHEXWASHER/BU[R]	F85-00000-09365
23	F85-04000-44001	1	SC-NUHEXM04[R]	F85-04000-44001
22	F85-09520-44755	14	SC-NU-01-M095*020-NP-SLV[R]	F85-09520-44755
21	F85-09535-45795	1	SC-NU-01-3/8in*035-NP-SLV	
20	F88-40121-10297	4	SC-M04*12-12-090-B-ZP-BLK[R]	F88-40121-10297
19	F88-00000-56807	23	SC-M03*08-12-PSW-B-ZP-SLV[R]	replace:F88-30081-20291
18	F88-00001-07429	8	SC-M/3MM/6MM/FLAT/BK/TORX	F88-00001-07429
17	F88-00000-28152	1	SC-M/3MM/15MM/PANWASHER/BUWH	F88-00000-28152
16	F88-00001-18305	57	SC-B/3MM/8MM/CHEESE/SRWH	
15	G51-00200-02403	4	PLA-RUBFOOTRNDBK/3X2[R]	022-02000-26549
14	F97-00000-78879	1	PLA-P0AWQ/CABLE-SPACER	022-00000-78876
13	G58-00000-52835	1	P0AAQ-Ferrite-holder-REVA	022-00000-52840
12	F97-00000-83715	2	MI-P0AWP/CONDUCTIVE_SPONE	F97-00000-83715
11	F94-00000-67287	1	MET-STUD07MM//+E/TM3[R]	F94-00000-67287
10	F94-00001-07192	2	MET-STUD/M/3MM/9.2MM/HEX[R]12.9	F94-00001-07192
9	F94-00000-72523	2	MET-STUD/M/3MM/31.1MM/HEX[R]	F94-00000-72523
8	F94-00000-78818	4	MET-STUD/3MM/28.5MM	F94-00000-78818
7	A65-00001-04616	1	MET-P0BI9/CARD_CAGE	022-00001-04619
6	A65-00000-71703	1	MET-P0AWQ/PSU_SHIELD[R]	022-00000-30072
5	A60-00001-15486	1	MET-P0AWN/SHIELD	022-00000-78813
4	F88-00001-07425	2	M3X6 MM, B/NDDING, TORX,BLACK ZINC	F88-00001-07425
3	A65-00001-05443	1	DRA-MET/P0BI9/SHIELD_COVER	022-00001-05440
2	J02-00001-07078	1	DRA-MET/P0BI9/CASE	022-00001-04569
1	F96-00000-00836	1	0F96-WASHER, ROHS	

All information (including drawings and diagrams) contained in this document is the property of MUSIC GROUP LTD. Addressees whom the information is confided to shall maintain the information in confidence and shall not release it to any unauthorised third parties (except under attorney client privilege or under appropriate confidentiality agreements). Any unauthorised disclosure, use, application or any other dealings in the information shall result in civil and/or (where applicable) criminal liabilities and penalties.

MUSIC GROUP

PROJECT:	P0BI9
MATERIAL:	
FINISH:	
DRAWN:	Liang.Tony
CHECKED:	Ye.Hua.Ming
APPROVED:	Xiao.Shirley
DATE:	2014-02-13
DESCRIPTION:	P0BI9-BOTTOM-ASM
SIZE:	A2
DRAWING NUMBER:	014-00001-14574
REV:	A
SCALE	7:20
SHEET	1 OF 1

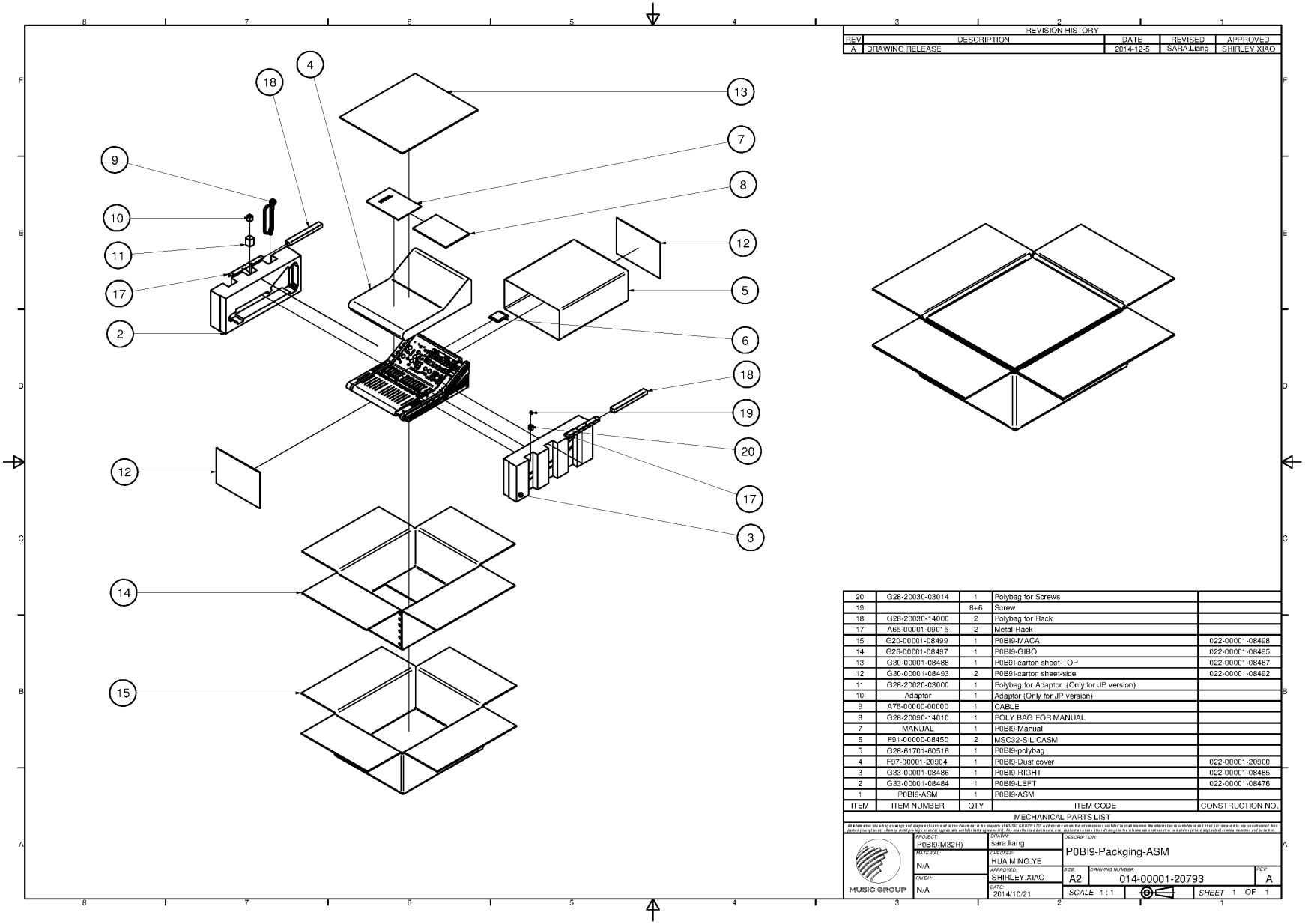

ITEM	ITEM NUMBER	QTY	ITEM CODE	CONSTRUCTION NO.
20	G28-20030-03014	1	Polybag for Screws	
19		8+6	Screw	
18	G28-20030-14000	2	Polybag for Rack	
17	A65-00001-09015	2	Metal Rack	
15	G20-00001-08499	1	P0BI9-MACA	022-00001-08498
14	G26-00001-08497	1	P0BI9-GIBO	022-00001-08495
13	G30-00001-08488	1	P0B9I-carton sheet-TOP	022-00001-08487
12	G30-00001-08493	2	P0B9I-carton sheet-side	022-00001-08492
11	G28-20020-03000	1	Polybag for Adaptor (Only for JP version)	
10	Adaptor	1	Adaptor (Only for JP version)	
9	A76-00000-00000	1	CABLE	
8	G28-20090-14010	1	POLY BAG FOR MANUAL	
7	MANUAL	1	P0BI9-Manual	
6	F91-00000-08450	2	MSC32-SILICASM	
5	G28-61701-60516	1	P0BI9-polybag	
4	F97-00001-20904	1	P0BI9-Dust cover	022-00001-20900
3	G33-00001-08486	1	P0BI9-RIGHT	022-00001-08485
2	G33-00001-08484	1	P0BI9-LEFT	022-00001-08476
1	P0BI9-ASM	1	P0BI9-ASM	022-00001-08476

MECHANICAL PARTS LIST

All information including drawings and diagrams contained in this document is the property of MUSIC GROUP LTD. Addressees assume the information is entitled to trust however the information is confidential and must not be used by any unauthorized third parties except under express written agreement. Any disclosure of this copy, publication, or reproduction of the information contained herein without the express written consent is prohibited and penalized.

PROJECT: P0BI9(M32R)	DRAWN: sara.liang	DESCRIPTION: P0BI9-Packging-ASM	
MATERIAL: N/A	CHECKED: HUA MING.YE		
FINISH: N/A	APPROVED: SHIRLEY.XIAO	SIZE: A2	DRAWING NUMBER: 014-00001-20793 REV: A
MUSIC GROUP	DATE: 2014/10/21	SCALE 1 : 1	SHEET 1 OF 1

REVISION HISTORY				
REV	DESCRIPTION	DATE	REVISED	APPROVED
A0	Drawing release	2014-08-03	Tony.Liang	Shirley.Xiao
A1	update bom	2014-10-18	Tony.Liang	Shirley.Xiao
A2	Update the P/N of holder	2014-11-03	Tony.Liang	Shirley.Xiao

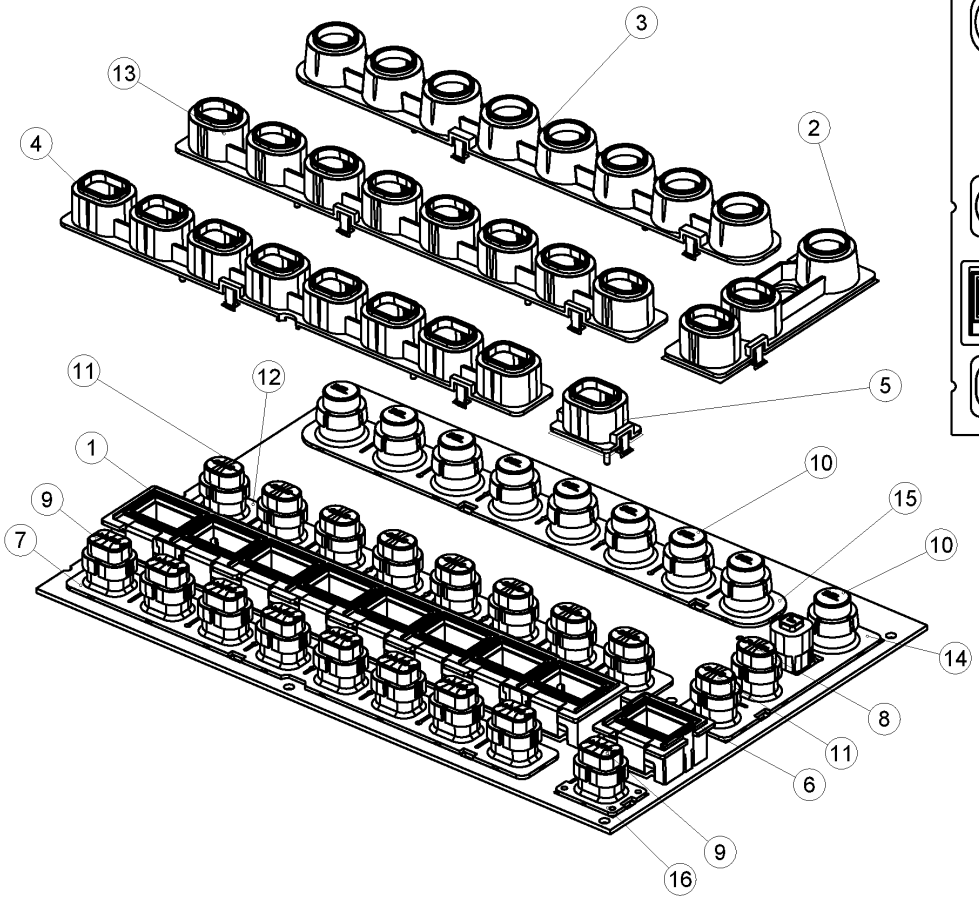

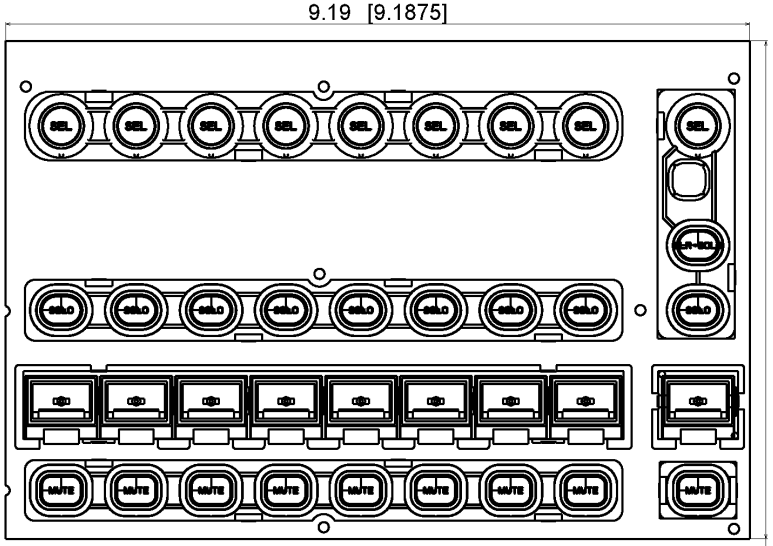

SCALE 1:1

ITEM	ITEM NUMBER	QTY	ITEM CODE	CONSTRUCTION NUMBER
16	G53-00000-95742	1	RUBBER REC-1 REV.A	022-00001-01390
15	G53-00000-95755	1	RUBBER R8 REV.A	022-00001-01392
14	G53-00000-95756	1	RUBBER R1REC2 REV.A	022-00001-01393
13	G53-00000-96005	1	P0B3I-OVAL-HOUSING-8	022-00001-01542
12	G53-00000-95782	1	OVAL-RUBBER-8	022-00001-01400
11	I63-00001-03067	9	MAIN BUTTON: SOLO	022-00001-01523
10	I63-00001-03062	9	MAIN BUTTON: SEL	022-00001-01522
9	I63-00001-03081	9	MAIN BUTTON: MUTE	022-00001-01521
8	I63-00001-03069	1	MAIN BUTTON: CLR SOLO	022-00001-01523
7	G53-00000-98797	1	M32-RUBBER-REC8	022-00001-01403
6	G53-00001-21094	1	M32-LCD-HOLDER-1	022-00001-01559
5	G53-00000-95808	1	M32-HOUSING-REC1	022-00001-01527
4	G53-00000-95991	1	M32 HOUSING REC 8	022-00001-01533
3	G53-00000-95990	1	M32 HOUSING R8	022-00001-01532
2	G53-00000-95992	1	M32 HOUSING R1REC2	022-00001-01534
1	G53-00001-21095	1	LCD-HOLDER-8	022-00001-01565

All information (including drawings and diagrams) contained in this document is the property of MUSIC GROUP LTD. Addressees whom the information is confided to shall maintain the information in confidence and shall not release it to any unauthorised third parties (except under attorney client privilege or under appropriate confidentiality agreements). Any unauthorised disclosure, use, application or any other dealings in the information shall result in civil and/or (where applicable) criminal liabilities and penalties.

PROJECT: P0BI9	DRAWN: Liang.Tony.	DESCRIPTION: P0BI9-PCBA_FADER_R	
MATERIAL:	CHECKED: Ye.HuaMing		
FINISH:	APPROVED: Xiao.Shirley	SIZE: A2	DRAWING NUMBER: 014-00001-14570 REV: A
	DATE: 2014-07-15	SCALE 1:1	SHEET 1 OF 1